# HIGH PERFORMANCE COMPRESSION SPRINGS
# 高性能压缩弹簧

**Stock sizes in chromium alloy steel**

Henry Spring now offers an additional line to complement our current line of music wire and stainless steel springs. These items offer high performance, in dimensions not available in our standard music wire and stainless steel line.

**Materials**

Either Chrome Vanadium or Chrome Silicon will be supplied, based on availability at time of shipment. Not recommended for applications where the temperature exceeds 425* F (220 ℃).

**Wire diameter is prior to forming.**

Certificate of Conformance is available at no charge.
Certificate of chemical analysis is not available.

**Coil Direction**

Right Hand (RH) or Left Hand (LH) as per the following tables.

**Free Length**

Free length is reference or approximate only.

**Ends**

Part numbers starting with C00168, C00170, C00186, C00200, C00257, C00309, C00347 and C00395 are squared only. All others are squared and ground.

**Loads and Spring Rates**

Rate is calculated and should be used as a reference only. Load (P) at $L_1$ is +/-10%.

**ID and OD tolerances**

High performance springs are designed to fit in a hole and over a shaft as specified in the table.

**Finish & Packaging**

Standard finish is oil. Special finishes upon request. Parts are bulk packed, so tangling can occur during transit on wire sizes under 0.89mm (0.035”). Please inquire about special packaging when ordering.

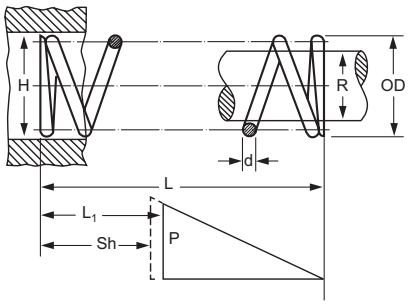


| | | | | | |
|---|---|---|---|---|---|
| OD | = | Outside diameter | $L_1$ | = | Load length (minimum working length) |
| d | = | Wire diameter | | | |
| Sh | = | Approx Solid Height | P | = | Load at $L_1$ |
| L | = | Free length (reference use only) | H | = | Hole Diameter |
| | | | R | = | Shaft Diameter |

材质为铬合金的常备高性能压缩弹簧

Henry Spring 现提供新增产品，以补充我们目前提供的乐器金属弦线和不锈钢金属线弹簧。这些产品均具备高性能，丰富了我们的标准乐器金属线和不锈钢线产品的尺寸规格系列。

材质

可提供铬钒或铬硅产品。在温度超过425℉（220℃）的环境下，不建议使用本产品。

线径是指成型前的线径。

免费提供合格证书。

不提供化学分析证书。

承载载荷和弹性系数

我们已估算出了弹性系数，但仅供参考。$L_1$下的承载载荷P为+/-10%。

内径和外径公差

关于高性能弹簧适合的孔和轴，见表格。

表面末道漆层和包装

标准处理采用的是涂油。如需特殊处理，请联系我们。我们的产品均为散装，因此在运输过程中，直径小于0.89mm（0.035”）的钢丝会发生缠绕。订购时，请要求特殊包装。

## 螺旋方向

右手或左手螺旋方向，见下表。

## 自由长度

自由长度仅供参考。

## 末端

编号以C00168, C00170, C00186, C00200, C00257, C00309, C00347和C00395开头的部件仅为方形。其他均为方形、磨平。

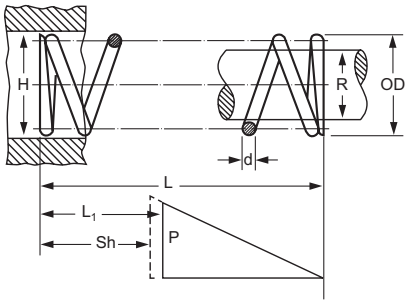


OD = 外径
d = 线径
Sh = 近似整体高度
L = 自由高度（仅供参考）
$L_1$ = 工作高度（最小工作长度）
P = $L_1$下的承载载荷
H = 孔直径
R = 轴直径

ADDITIONAL DIMENSIONS ARE AVAILABLE BY CALLING +65 6863 5636.
需要其他尺寸的产品，请拨打 +86-0511-8803 6999

**HIGH PERFORMANCE COMPRESSION SPRINGS**
**高性能压缩弹簧**

| Catalog Number 编号 | Coil Dir. 线圈方向 | Outside Diameter (OD) 外径（OD） | | Wire Diameter (d) 线径（d） | | Free Length (L) Approx. 近似自由长度（L） | | Fits in Hole Size (H) 孔配合直径 (H) | | Fits over Shaft (R) 轴配合直径(R) | | Load Length ($L_1$) 承载长度($L_1$) | | Solid Height (Sh) Approx. 固定状态下的高度（Sh） | | Load (P) at $L_1$ +/-10% $L_1$的载荷（P）+/-10% | | Spring Rate (R) Reference Only 弹性系数(R)，仅供参考 | |
|---|---|---|---|---|---|---|---|---|---|---|---|---|---|---|---|---|---|---|---|
| | | in | mm | in | mm | in | mm | in | mm | in | mm | in | mm | in | mm | lb | N | lb/in | N/mm |
| C00168003003 | | | | | | 0.126 | 3.2 | | | | | 0.087 | 2.2 | 0.063 | 1.6 | | | 14.00 | 2.45 |
| C00168003004 | | | | | | 0.157 | 4 | | | | | 0.108 | 2.8 | 0.079 | 2.0 | | | 11.20 | 1.96 |
| C00168003005 | | | | | | 0.197 | 5 | | | | | 0.134 | 3.4 | 0.098 | 2.5 | | | 8.75 | 1.53 |
| C00168003006 | | | | | | 0.248 | 6.3 | | | | | 0.169 | 4.3 | 0.122 | 3.1 | | | 7.00 | 1.23 |
| C00168003008 | LH 向左 | 0.066 | 1.68 | 0.010 | 0.25 | 0.315 | 8 | | | 0.043 | 1.1 | 0.217 | 5.5 | 0.157 | 4.0 | 0.55 | 2.45 | 5.60 | 0.98 |
| C00168003010 | | | | | | 0.394 | 10 | | | | | 0.268 | 6.8 | 0.197 | 5.0 | | | 4.38 | 0.77 |
| C00168003013 | | | | | | 0.492 | 12.5 | | | | | 0.335 | 8.5 | 0.244 | 6.2 | | | 3.50 | 0.61 |
| C00168003016 | | | | | | 0.630 | 16 | | | | | 0.433 | 11.0 | 0.315 | 8.0 | | | 2.80 | 0.49 |
| C00168003020 | | | | | | 0.787 | 20 | | | | | 0.539 | 13.7 | 0.394 | 10.0 | | | 2.22 | 0.39 |
| C00168003025 | | | | | | 0.984 | 25 | 0.071 | 1.8 | | | 0.669 | 17.0 | 0.492 | 12.5 | | | 1.75 | 0.31 |
| C00170003003 | | | | | | 0.126 | 3.2 | | | | | 0.099 | 2.5 | 0.083 | 2.1 | | | 36.36 | 6.37 |
| C00170003004 | | | | | | 0.157 | 4 | | | | | 0.123 | 3.1 | 0.102 | 2.6 | | | 28.57 | 5.00 |
| C00170003005 | | | | | | 0.197 | 5 | | | | | 0.152 | 3.9 | 0.126 | 3.2 | | | 22.22 | 3.89 |
| C00170003006 | | | | | | 0.248 | 6.3 | | | | | 0.193 | 4.9 | 0.161 | 4.1 | | | 18.18 | 3.18 |
| C00170003008 | RH 向右 | 0.067 | 1.7 | 0.013 | 0.32 | 0.315 | 8 | | | | | 0.246 | 6.2 | 0.205 | 5.2 | 0.99 | 4.41 | 14.29 | 2.50 |
| C00170003010 | | | | | | 0.394 | 10 | | | | | 0.304 | 7.7 | 0.252 | 6.4 | | | 11.11 | 1.95 |
| C00170003013 | | | | | | 0.492 | 12.5 | | | 0.039 | 1.0 | 0.381 | 9.7 | 0.315 | 8.0 | | | 8.89 | 1.56 |
| C00170003016 | | | | | | 0.630 | 16 | | | | | 0.491 | 12.5 | 0.409 | 10.4 | | | 7.14 | 1.25 |
| C00170003020 | | | | | | 0.787 | 20 | | | | | 0.614 | 15.6 | 0.512 | 13.0 | | | 5.71 | 1.00 |
| C00170003025 | | | | | | 0.984 | 25 | | | | | 0.761 | 19.3 | 0.630 | 16.0 | | | 4.44 | 0.78 |
| C00186004010 | | | | | | 0.394 | 10 | | | | | 0.327 | 8.3 | 0.287 | 7.3 | | | 26.34 | 4.61 |
| C00186004013 | LH 向左 | 0.073 | 1.86 | 0.016 | 0.4 | 0.492 | 12.5 | | | | | 0.413 | 10.5 | 0.366 | 9.3 | 1.76 | 7.85 | 22.22 | 3.89 |
| C00186004016 | | | | | | 0.630 | 16 | | | | | 0.531 | 13.5 | 0.472 | 12.0 | | | 17.78 | 3.11 |
| C00186004020 | | | | | | 0.787 | 20 | | | | | 0.663 | 16.9 | 0.591 | 15.0 | | | 14.22 | 2.49 |
| C00188003003 | | | | | | 0.126 | 3.2 | 0.079 | 2.0 | | | 0.087 | 2.2 | 0.063 | 1.6 | | | 17.92 | 3.14 |
| C00188003004 | | | | | | 0.157 | 4 | | | | | 0.108 | 2.8 | 0.079 | 2.0 | | | 14.34 | 2.51 |
| C00188003005 | RH 向右 | 0.074 | 1.88 | 0.011 | 0.28 | 0.197 | 5 | | | 0.049 | 1.3 | 0.134 | 3.4 | 0.098 | 2.5 | 0.71 | 3.14 | 11.20 | 1.96 |
| C00188003006 | | | | | | 0.248 | 6.3 | | | | | 0.169 | 4.3 | 0.122 | 3.1 | | | 8.96 | 1.57 |
| C00188003008 | | | | | | 0.315 | 8 | | | | | 0.217 | 5.5 | 0.157 | 4.0 | | | 7.17 | 1.26 |
| C00188003010 | | | | | | 0.394 | 10 | | | | | 0.268 | 6.8 | 0.197 | 5.0 | | | 5.60 | 0.98 |

## HIGH PERFORMANCE COMPRESSION SPRINGS
## 高性能压缩弹簧

| Catalog Number 编号 | Coil Dir. 线圈方向 | Outside Diameter (OD) 外径（OD） | | Wire Diameter (d) 线径 (d) | | Free Length (L) Approx. 近似自由长度 (L) | | Fits in Hole Size (H) 孔配合直径 (H) | | Fits over Shaft (R) 轴配合直径(R) | | Load Length ($L_1$) 承载长度($L_1$) | | Solid Height (Sh) Approx. 固定状态下的高度 (Sh) | | Load (P) at $L_1$ +/-10% $L_1$的载荷（P）+/-10% | | Spring Rate (R) Reference Only 弹性系数(R)，仅供参考 | |
|---|---|---|---|---|---|---|---|---|---|---|---|---|---|---|---|---|---|---|---|
| | | in | mm | in | mm | in | mm | in | mm | in | mm | in | mm | in | mm | lb | N | lb/in | N/mm |
| C00188003013 | | | | | | 0.492 | 12.5 | | | | | 0.335 | 8.5 | 0.244 | 6.2 | | | 4.48 | 0.78 |
| C00188003016 | RH 向右 | 0.074 | 1.88 | 0.011 | 0.28 | 0.630 | 16 | | | 0.049 | 1.3 | 0.433 | 11.0 | 0.315 | 8.0 | 0.71 | 3.14 | 3.58 | 0.63 |
| C00188003020 | | | | | | 0.787 | 20 | | | | | 0.539 | 13.7 | 0.394 | 10.0 | | | 2.84 | 0.50 |
| C00188003025 | | | | | | 0.984 | 25 | | | | | 0.669 | 17.0 | 0.492 | 12.5 | | | 2.24 | 0.39 |
| C00190004010 | | | | | | 0.394 | 10 | | | | | 0.304 | 7.7 | 0.252 | 6.4 | | | 13.83 | 2.42 |
| C00190004013 | | | | | | 0.492 | 12.5 | 0.079 | 2.0 | | | 0.381 | 9.7 | 0.315 | 8.0 | | | 11.06 | 1.94 |
| C00190004016 | | | | | | 0.630 | 16 | | | | | 0.491 | 12.5 | 0.409 | 10.4 | | | 8.89 | 1.56 |
| C00190004020 | | 0.075 | 1.9 | 0.014 | 0.36 | 0.787 | 20 | | | 0.043 | 1.1 | 0.614 | 15.6 | 0.512 | 13.0 | 1.23 | 5.49 | 7.11 | 1.25 |
| C00190004025 | | | | | | 0.984 | 25 | | | | | 0.761 | 19.3 | 0.630 | 16.0 | | | 5.53 | 0.97 |
| C00190004032 | | | | | | 1.260 | 32 | | | | | 0.982 | 24.9 | 0.819 | 20.8 | | | 4.44 | 0.78 |
| C00190004040 | | | | | | 1.575 | 40 | | | | | 1.228 | 31.2 | 1.024 | 26.0 | | | 3.56 | 0.62 |
| C00200003006 | | | | | | 0.248 | 6.3 | | | | | 0.154 | 3.9 | 0.098 | 2.5 | | | 5.13 | 0.90 |
| C00200003008 | | | | | | 0.315 | 8 | | | | | 0.197 | 5.0 | 0.126 | 3.2 | | | 4.11 | 0.72 |
| C00200003010 | | | | | | 0.394 | 10 | | | | | 0.244 | 6.2 | 0.157 | 4.0 | | | 3.24 | 0.57 |
| C00200003013 | | 0.079 | 2 | 0.010 | 0.25 | 0.492 | 12.5 | 0.083 | 2.1 | 0.055 | 1.4 | 0.303 | 7.7 | 0.197 | 5.0 | 0.49 | 2.16 | 2.57 | 0.45 |
| C00200003016 | LH 向左 | | | | | 0.630 | 16 | | | | | 0.394 | 10.0 | 0.252 | 6.4 | | | 2.05 | 0.36 |
| C00200003020 | | | | | | 0.787 | 20 | | | | | 0.492 | 12.5 | 0.315 | 8.0 | | | 1.64 | 0.29 |
| C00200003025 | | | | | | 0.984 | 25 | | | | | 0.606 | 15.4 | 0.394 | 10.0 | | | 1.28 | 0.22 |
| C00200003032 | | | | | | 1.260 | 32 | | | | | 0.787 | 20.0 | 0.512 | 13.0 | | | 1.03 | 0.18 |
| C00208005003 | | | | | | 0.126 | 3.2 | | | | | 0.106 | 2.7 | 0.094 | 2.4 | | | 111.11 | 19.46 |
| C00208005004 | | | | | | 0.157 | 4 | | | | | 0.133 | 3.4 | 0.118 | 3.0 | | | 88.89 | 15.57 |
| C00208005005 | | | | | | 0.197 | 5 | | | | | 0.166 | 4.2 | 0.148 | 3.8 | | | 71.11 | 12.46 |
| C00208005006 | | | | | | 0.248 | 6.3 | | | | | 0.208 | 5.3 | 0.185 | 4.7 | | | 55.56 | 9.73 |
| C00208005008 | | 0.082 | 2.08 | 0.018 | 0.45 | 0.315 | 8 | | | 0.043 | 1.1 | 0.265 | 6.7 | 0.236 | 6.0 | 2.21 | 9.81 | 44.44 | 7.78 |
| C00208005010 | | | | | | 0.394 | 10 | | | | | 0.327 | 8.3 | 0.287 | 7.3 | | | 32.92 | 5.77 |
| C00208005013 | | | | | | 0.492 | 12.5 | | | | | 0.413 | 10.5 | 0.366 | 9.3 | | | 27.78 | 4.87 |
| C00208005016 | | | | | | 0.630 | 16 | | | | | 0.531 | 13.5 | 0.472 | 12.0 | | | 22.22 | 3.89 |
| C00208005020 | | | | | | 0.787 | 20 | | | | | 0.663 | 16.9 | 0.591 | 15.0 | | | 17.78 | 3.11 |
| C00212004004 | | | | | | 0.157 | 4 | | | | | 0.123 | 3.1 | 0.102 | 2.6 | | | 44.44 | 7.78 |
| C00212004005 | | | | | | 0.197 | 5 | | | | | 0.152 | 3.9 | 0.126 | 3.2 | | | 34.57 | 6.05 |
| C00212004006 | | | | | | 0.248 | 6.3 | | | | | 0.193 | 4.9 | 0.161 | 4.1 | | | 28.28 | 4.95 |
| C00212004008 | | | | | | 0.315 | 8 | | | | | 0.246 | 6.2 | 0.205 | 5.2 | | | 22.22 | 3.89 |
| C00212004010 | | | | | | 0.394 | 10 | | | | | 0.304 | 7.7 | 0.252 | 6.4 | | | 17.28 | 3.03 |
| C00212004013 | | 0.083 | 2.12 | 0.016 | 0.4 | 0.492 | 12.5 | | | 0.049 | 1.3 | 0.381 | 9.7 | 0.315 | 8.0 | 1.54 | 6.86 | 13.83 | 2.42 |
| C00212004016 | | | | | | 0.630 | 16 | 0.089 | 2.3 | | | 0.491 | 12.5 | 0.409 | 10.4 | | | 11.11 | 1.95 |
| C00212004020 | | | | | | 0.787 | 20 | | | | | 0.614 | 15.6 | 0.512 | 13.0 | | | 8.89 | 1.56 |
| C00212004025 | | | | | | 0.984 | 25 | | | | | 0.761 | 19.3 | 0.630 | 16.0 | | | 6.91 | 1.21 |
| C00212004032 | | | | | | 1.260 | 32 | | | | | 0.982 | 24.9 | 0.819 | 20.8 | | | 5.56 | 0.97 |
| C00212004040 | | | | | | 1.575 | 40 | | | | | 1.228 | 31.2 | 1.024 | 26.0 | | | 4.44 | 0.78 |
| C00214003003 | | | | | | 0.126 | 3.2 | | | | | 0.087 | 2.2 | 0.063 | 1.6 | | | 22.40 | 3.92 |
| C00214003004 | | | | | | 0.157 | 4 | | | | | 0.108 | 2.8 | 0.079 | 2.0 | | | 17.92 | 3.14 |
| C00214003005 | | | | | | 0.197 | 5 | | | | | 0.134 | 3.4 | 0.098 | 2.5 | | | 14.00 | 2.45 |
| C00214003006 | | | | | | 0.248 | 6.3 | | | | | 0.169 | 4.3 | 0.122 | 3.1 | | | 11.20 | 1.96 |
| C00214003008 | RH 向右 | 0.084 | 2.14 | 0.013 | 0.32 | 0.315 | 8 | | | 0.055 | 1.4 | 0.217 | 5.5 | 0.157 | 4.0 | 0.88 | 3.92 | 8.96 | 1.57 |
| C00214003010 | | | | | | 0.394 | 10 | | | | | 0.268 | 6.8 | 0.197 | 5.0 | | | 7.00 | 1.23 |
| C00214003013 | | | | | | 0.492 | 12.5 | | | | | 0.335 | 8.5 | 0.244 | 6.2 | | | 5.60 | 0.98 |
| C00214003016 | | | | | | 0.630 | 16 | | | | | 0.433 | 11.0 | 0.315 | 8.0 | | | 4.48 | 0.78 |
| C00214003020 | | | | | | 0.787 | 20 | | | | | 0.539 | 13.7 | 0.394 | 10.0 | | | 3.56 | 0.62 |
| C00214003025 | | | | | | 0.984 | 25 | | | | | 0.669 | 17.0 | 0.492 | 12.5 | | | 2.80 | 0.49 |
| C00232005004 | | | | | | 0.157 | 4 | | | | | 0.133 | 3.4 | 0.118 | 3.0 | | | 111.11 | 19.46 |
| C00232005005 | | | | | | 0.197 | 5 | | | | | 0.166 | 4.2 | 0.148 | 3.8 | | | 88.89 | 15.57 |
| C00232005006 | | | | | | 0.248 | 6.3 | | | | | 0.208 | 5.3 | 0.185 | 4.7 | | | 69.44 | 12.16 |
| C00232005008 | | | | | | 0.315 | 8 | | | | | 0.265 | 6.7 | 0.236 | 6.0 | | | 55.56 | 9.73 |
| C00232005010 | | 0.091 | 2.32 | 0.020 | 0.5 | 0.394 | 10 | 0.098 | 2.5 | 0.049 | 1.3 | 0.327 | 8.3 | 0.287 | 7.3 | 2.76 | 12.26 | 41.15 | 7.21 |
| C00232005013 | | | | | | 0.492 | 12.5 | | | | | 0.413 | 10.5 | 0.366 | 9.3 | | | 34.72 | 6.08 |
| C00232005016 | | | | | | 0.630 | 16 | | | | | 0.531 | 13.5 | 0.472 | 12.0 | | | 27.78 | 4.87 |
| C00232005020 | | | | | | 0.787 | 20 | | | | | 0.663 | 16.9 | 0.591 | 15.0 | | | 22.22 | 3.89 |
| C00232005025 | | | | | | 0.984 | 25 | | | | | 0.828 | 21.0 | 0.736 | 18.7 | | | 17.64 | 3.09 |
| C00240003040 | | 0.094 | 2.4 | 0.010 | 0.25 | 1.575 | 40 | | | 0.071 | 1.8 | 0.866 | 22.0 | 0.472 | 12.0 | 0.40 | 1.77 | 0.56 | 0.10 |

## HIGH PERFORMANCE COMPRESSION SPRINGS
## 高性能压缩弹簧

| Catalog Number 编号 | Coil Dir. 线圈方向 | Outside Diameter (OD) 外径（OD） | | Wire Diameter (d) 线径 (d) | | Free Length (L) Approx. 近似自由长度 (L) | | Fits in Hole Size (H) 孔配合直径 (H) | | Fits over Shaft (R) 轴配合直径(R) | | Load Length ($L_1$) 承载长度($L_1$) | | Solid Height (Sh) Approx. 固定状态下的高度 (Sh) | | Load (P) at $L_1$ +/-10% $L_1$的载荷（P）+/-10% | | Spring Rate (R) Reference Only 弹性系数(R)，仅供参考 | |
|---|---|---|---|---|---|---|---|---|---|---|---|---|---|---|---|---|---|---|---|
| | | in | mm | in | mm | in | mm | in | mm | in | mm | in | mm | in | mm | lb | N | lb/in | N/mm |
| C00240003050 | | | | 0.010 | 0.25 | 1.969 | 50 | | | 0.071 | 1.8 | 1.083 | 27.5 | 0.551 | 14.0 | 0.40 | 1.77 | 0.45 | 0.08 |
| C00240003063 | RH 向右 | | | | | 2.480 | 63 | | | | | 1.378 | 35.0 | 0.709 | 18.0 | | | 0.36 | 0.06 |
| C00240005013 | | | | | | 0.492 | 12.5 | | | | | 0.381 | 9.7 | 0.315 | 8.0 | | | 17.78 | 3.11 |
| C00240005016 | | | | | | 0.630 | 16 | | | | | 0.491 | 12.5 | 0.409 | 10.4 | | | 14.29 | 2.50 |
| C00240005020 | | 0.094 | 2.4 | 0.018 | 0.45 | 0.787 | 20 | | | 0.055 | 1.4 | 0.614 | 15.6 | 0.512 | 13.0 | 1.98 | 8.83 | 11.43 | 2.00 |
| C00240005025 | LH 向左 | | | | | 0.984 | 25 | | | | | 0.761 | 19.3 | 0.630 | 16.0 | | | 8.89 | 1.56 |
| C00240005032 | | | | | | 1.260 | 32 | | | | | 0.982 | 24.9 | 0.819 | 20.8 | | | 7.14 | 1.25 |
| C00240005040 | | | | | | 1.575 | 40 | | | | | 1.228 | 31.2 | 1.024 | 26.0 | | | 5.71 | 1.00 |
| C00242004003 | | | | | | 0.126 | 3.2 | | | | | 0.087 | 2.2 | 0.063 | 1.6 | | | 28.00 | 4.90 |
| C00242004004 | | | | | | 0.157 | 4 | | | | | 0.108 | 2.8 | 0.079 | 2.0 | | | 22.40 | 3.92 |
| C00242004005 | | | | | | 0.197 | 5 | 0.098 | 2.5 | | | 0.134 | 3.4 | 0.098 | 2.5 | | | 17.50 | 3.07 |
| C00242004006 | | | | | | 0.248 | 6.3 | | | | | 0.169 | 4.3 | 0.122 | 3.1 | | | 14.00 | 2.45 |
| C00242004008 | | | | | | 0.315 | 8 | | | | | 0.217 | 5.5 | 0.157 | 4.0 | | | 11.20 | 1.96 |
| C00242004010 | | | | | | 0.394 | 10 | | | | | 0.268 | 6.8 | 0.197 | 5.0 | | | 8.75 | 1.53 |
| C00242004013 | | 0.095 | 2.42 | 0.014 | 0.36 | 0.492 | 12.5 | | | 0.063 | 1.6 | 0.335 | 8.5 | 0.244 | 6.2 | 1.10 | 4.90 | 7.00 | 1.23 |
| C00242004016 | | | | | | 0.630 | 16 | | | | | 0.433 | 11.0 | 0.315 | 8.0 | | | 5.60 | 0.98 |
| C00242004020 | | | | | | 0.787 | 20 | | | | | 0.539 | 13.7 | 0.394 | 10.0 | | | 4.44 | 0.78 |
| C00242004025 | | | | | | 0.984 | 25 | | | | | 0.669 | 17.0 | 0.492 | 12.5 | | | 3.50 | 0.61 |
| C00242004032 | | | | | | 1.260 | 32 | | | | | 0.866 | 22.0 | 0.630 | 16.0 | | | 2.80 | 0.49 |
| C00242004040 | | | | | | 1.575 | 40 | | | | | 1.083 | 27.5 | 0.787 | 20.0 | | | 2.24 | 0.39 |
| C00242004050 | | | | | | 1.969 | 50 | | | | | 1.339 | 34.0 | 0.984 | 25.0 | | | 1.75 | 0.31 |
| C00257003008 | | | | | | 0.315 | 8 | | | | | 0.197 | 5.0 | 0.126 | 3.2 | | | 6.72 | 1.18 |
| C00257003010 | | | | | | 0.394 | 10 | | | | | 0.244 | 6.2 | 0.157 | 4.0 | | | 5.31 | 0.93 |
| C00257003013 | | | | | | 0.492 | 12.5 | | | | | 0.303 | 7.7 | 0.197 | 5.0 | | | 4.20 | 0.74 |
| C00257003016 | | 0.101 | 2.57 | 0.013 | 0.32 | 0.630 | 16 | 0.106 | 2.7 | 0.071 | 1.8 | 0.394 | 10.0 | 0.252 | 6.4 | 0.79 | 3.53 | 3.36 | 0.59 |
| C00257003020 | | | | | | 0.787 | 20 | | | | | 0.492 | 12.5 | 0.315 | 8.0 | | | 2.69 | 0.47 |
| C00257003025 | | | | | | 0.984 | 25 | | | | | 0.606 | 15.4 | 0.394 | 10.0 | | | 2.10 | 0.37 |
| C00257003032 | | | | | | 1.260 | 32 | | | | | 0.787 | 20.0 | 0.512 | 13.0 | | | 1.68 | 0.29 |
| C00257003040 | | | | | | 1.575 | 40 | | | | | 0.984 | 25.0 | 0.630 | 16.0 | | | 1.34 | 0.24 |
| C00262005005 | | | | | | 0.197 | 5 | | | | | 0.166 | 4.2 | 0.148 | 3.8 | | | 113.78 | 19.93 |
| C00262005006 | RH 向右 | | | | | 0.248 | 6.3 | | | | | 0.208 | 5.3 | 0.185 | 4.7 | | | 88.89 | 15.57 |
| C00262005008 | | | | | | 0.315 | 8 | | | | | 0.265 | 6.7 | 0.236 | 6.0 | | | 71.11 | 12.46 |
| C00262005010 | | 0.103 | 2.62 | 0.022 | 0.56 | 0.394 | 10 | | | 0.055 | 1.4 | 0.327 | 8.3 | 0.287 | 7.3 | 3.53 | 15.69 | 52.67 | 9.23 |
| C00262005013 | | | | | | 0.492 | 12.5 | | | | | 0.413 | 10.5 | 0.366 | 9.3 | | | 44.44 | 7.78 |
| C00262005016 | | | | | | 0.630 | 16 | | | | | 0.531 | 13.5 | 0.472 | 12.0 | | | 35.56 | 6.23 |
| C00262005020 | | | | | | 0.787 | 20 | | | | | 0.663 | 16.9 | 0.591 | 15.0 | | | 28.44 | 4.98 |
| C00262005025 | | | | | | 0.984 | 25 | | | | | 0.828 | 21.0 | 0.736 | 18.7 | | | 22.57 | 3.95 |
| C00268003004 | | | | | | 0.157 | 4 | | | | | 0.087 | 2.2 | 0.047 | 1.2 | | | 6.84 | 1.20 |
| C00268003016 | | | | | | 0.630 | 16 | | | | | 0.354 | 9.0 | 0.189 | 4.8 | | | 1.76 | 0.31 |
| C00268003020 | | | | | | 0.787 | 20 | | | | | 0.433 | 11.0 | 0.236 | 6.0 | | | 1.37 | 0.24 |
| C00268003025 | | | 2.68 | 0.011 | 0.28 | 0.984 | 25 | | | 0.079 | 2.0 | 0.543 | 13.8 | 0.276 | 7.0 | 0.49 | 2.16 | 1.10 | 0.19 |
| C00268003032 | | | | | | 1.260 | 32 | | | | | 0.709 | 18.0 | 0.374 | 9.5 | | | 0.88 | 0.15 |
| C00268003040 | | | | | | 1.575 | 40 | | | | | 0.866 | 22.0 | 0.472 | 12.0 | | | 0.68 | 0.12 |
| C00268003050 | | | | | | 1.969 | 50 | | | | | 1.083 | 27.5 | 0.551 | 14.0 | | | 0.55 | 0.10 |
| C00268003063 | | | | | | 2.480 | 63 | | | | | 1.378 | 35.0 | 0.709 | 18.0 | | | 0.44 | 0.08 |
| C00270004005 | | | | | | 0.197 | 5 | 0.110 | 2.8 | | | 0.134 | 3.4 | 0.098 | 2.5 | | | 22.05 | 3.86 |
| C00270004006 | | | | | | 0.248 | 6.3 | | | | | 0.169 | 4.3 | 0.122 | 3.1 | | | 17.64 | 3.09 |
| C00270004008 | | 0.106 | | | | 0.315 | 8 | | | | | 0.217 | 5.5 | 0.157 | 4.0 | | | 14.11 | 2.47 |
| C00270004010 | | | | | | 0.394 | 10 | | | | | 0.268 | 6.8 | 0.197 | 5.0 | | | 11.03 | 1.93 |
| C00270004013 | | | | | | 0.492 | 12.5 | | | | | 0.335 | 8.5 | 0.244 | 6.2 | | | 8.82 | 1.54 |
| C00270004016 | | | | 0.016 | 0.4 | 0.630 | 16 | | | 0.071 | 1.8 | 0.433 | 11.0 | 0.315 | 8.0 | 1.39 | 6.18 | 7.06 | 1.24 |
| C00270004020 | | | 2.7 | | | 0.787 | 20 | | | | | 0.539 | 13.7 | 0.394 | 10.0 | | | 5.60 | 0.98 |
| C00270004025 | | | | | | 0.984 | 25 | | | | | 0.669 | 17.0 | 0.492 | 12.5 | | | 4.41 | 0.77 |
| C00270004032 | | | | | | 1.260 | 32 | | | | | 0.866 | 22.0 | 0.630 | 16.0 | | | 3.53 | 0.62 |
| C00270004040 | | | | | | 1.575 | 40 | | | | | 1.083 | 27.5 | 0.787 | 20.0 | | | 2.82 | 0.49 |
| C00270004050 | | | | | | 1.969 | 50 | | | | | 1.339 | 34.0 | 0.984 | 25.0 | | | 2.21 | 0.39 |
| C00270005005 | | | | | | 0.197 | 5 | | | | | 0.152 | 3.9 | 0.126 | 3.2 | | | 54.32 | 9.51 |
| C00270005006 | | | | 0.020 | 0.5 | 0.248 | 6.3 | | | 0.063 | 1.6 | 0.193 | 4.9 | 0.161 | 4.1 | 2.43 | 10.79 | 44.44 | 7.78 |
| C00270005008 | | | | | | 0.315 | 8 | | | | | 0.246 | 6.2 | 0.205 | 5.2 | | | 34.92 | 6.12 |

## HIGH PERFORMANCE COMPRESSION SPRINGS
## 高性能压缩弹簧

| Catalog Number 编号 | Coil Dir. 线圈方向 | Outside Diameter (OD) 外径（OD） | | Wire Diameter (d) 线径 (d) | | Free Length (L) Approx. 近似自由长度 (L) | | Fits in Hole Size (H) 孔配合直径 (H) | | Fits over Shaft (R) 轴配合直径(R) | | Load Length ($L_1$) 承载长度($L_1$) | | Solid Height (Sh) Approx. 固定状态下的高度 (Sh) | | Load (P) at $L_1$ +/-10% $L_1$的载荷（P）+/-10% | | Spring Rate (R) Reference Only 弹性系数(R)，仅供参考 | |
|---|---|---|---|---|---|---|---|---|---|---|---|---|---|---|---|---|---|---|---|
| | | in | mm | in | mm | in | mm | in | mm | in | mm | in | mm | in | mm | lb | N | lb/in | N/mm |
| C00270005010 | | | | | | 0.394 | 10 | | | | | 0.304 | 7.7 | 0.252 | 6.4 | | | 27.16 | 4.76 |
| C00270005013 | | | | | | 0.492 | 12.5 | | | | | 0.381 | 9.7 | 0.315 | 8.0 | | | 21.73 | 3.81 |
| C00270005016 | | | | | | 0.630 | 16 | | | | | 0.491 | 12.5 | 0.409 | 10.4 | | | 17.46 | 3.06 |
| C00270005020 | | 0.106 | 2.7 | 0.020 | 0.5 | 0.787 | 20 | 0.110 | 2.8 | 0.063 | 1.6 | 0.614 | 15.6 | 0.512 | 13.0 | 2.43 | 10.79 | 13.97 | 2.45 |
| C00270005025 | | | | | | 0.984 | 25 | | | | | 0.761 | 19.3 | 0.630 | 16.0 | | | 10.86 | 1.90 |
| C00270005032 | RH 向右 | | | | | 1.260 | 32 | | | | | 0.982 | 24.9 | 0.819 | 20.8 | | | 8.73 | 1.53 |
| C00270005040 | | | | | | 1.575 | 40 | | | | | 1.228 | 31.2 | 1.024 | 26.0 | | | 6.98 | 1.22 |
| C00284004008 | | 0.112 | 2.84 | 0.014 | 0.36 | 0.315 | 8 | 0.118 | 3.0 | 0.079 | 2.0 | 0.197 | 5.0 | 0.126 | 3.2 | 0.99 | 4.41 | 8.40 | 1.47 |
| C00300003004 | | | | | | 0.157 | 4 | | | | | 0.087 | 2.2 | 0.047 | 1.2 | | | 8.71 | 1.53 |
| C00300003005 | | | | | | 0.197 | 5 | | | | | 0.110 | 2.8 | 0.055 | 1.4 | | | 7.13 | 1.25 |
| C00300003006 | | | | | | 0.248 | 6.3 | | | | | 0.138 | 3.5 | 0.071 | 1.8 | | | 5.60 | 0.98 |
| C00300003008 | | | | | | 0.315 | 8 | | | | | 0.173 | 4.4 | 0.094 | 2.4 | | | 4.36 | 0.76 |
| C00300003010 | | | | | | 0.394 | 10 | | | | | 0.217 | 5.5 | 0.118 | 3.0 | | | 3.48 | 0.61 |
| C00300003013 | | | | | | 0.492 | 12.5 | | | | | 0.272 | 6.9 | 0.177 | 4.5 | | | 2.80 | 0.49 |
| C00300003016 | | | | 0.013 | 0.32 | 0.630 | 16 | | | 0.087 | 2.2 | 0.354 | 9.0 | 0.189 | 4.8 | 0.62 | 2.75 | 2.24 | 0.39 |
| C00300003020 | | | | | | 0.787 | 20 | | | | | 0.433 | 11.0 | 0.236 | 6.0 | | | 1.74 | 0.31 |
| C00300003025 | | | | | | 0.984 | 25 | | | | | 0.543 | 13.8 | 0.276 | 7.0 | | | 1.40 | 0.25 |
| C00300003032 | | | | | | 1.260 | 32 | | | | | 0.709 | 18.0 | 0.374 | 9.5 | | | 1.12 | 0.20 |
| C00300003040 | | | | | | 1.575 | 40 | | | | | 0.866 | 22.0 | 0.472 | 12.0 | | | 0.87 | 0.15 |
| C00300003050 | | | | | | 1.969 | 50 | | | | | 1.083 | 27.5 | 0.551 | 14.0 | | | 0.70 | 0.12 |
| C00300003063 | | | | | | 2.480 | 63 | | | | | 1.378 | 35.0 | 0.709 | 18.0 | | | 0.56 | 0.10 |
| C00300005016 | | | | | | 0.630 | 16 | | | | | 0.491 | 12.5 | 0.409 | 10.4 | | | 22.22 | 3.89 |
| C00300005020 | | 0.118 | 3 | 0.022 | 0.56 | 0.787 | 20 | 0.126 | 3.2 | 0.071 | 1.8 | 0.614 | 15.6 | 0.512 | 13.0 | | | 17.78 | 3.11 |
| C00300005025 | | | | | | 0.984 | 25 | | | | | 0.761 | 19.3 | 0.630 | 16.0 | 3.09 | 13.73 | 13.83 | 2.42 |
| C00300005032 | | | | | | 1.260 | 32 | | | | | 0.982 | 24.9 | 0.819 | 20.8 | | | 11.11 | 1.95 |
| C00300005040 | | | | | | 1.575 | 40 | | | | | 1.228 | 31.2 | 1.024 | 26.0 | | | 8.89 | 1.56 |
| C00300006005 | | | | | | 0.197 | 5 | | | | | 0.166 | 4.2 | 0.148 | 3.8 | | | 142.22 | 24.91 |
| C00300006006 | | | | | | 0.248 | 6.3 | | | | | 0.208 | 5.3 | 0.185 | 4.7 | | | 111.11 | 19.46 |
| C00300006008 | | | | | | 0.315 | 8 | | | | | 0.265 | 6.7 | 0.236 | 6.0 | | | 88.89 | 15.57 |
| C00300006010 | LH 向左 | | | | | 0.394 | 10 | | | | | 0.327 | 8.3 | 0.287 | 7.3 | | | 65.84 | 11.53 |
| C00300006013 | | | | | | 0.492 | 12.5 | | | | | 0.413 | 10.5 | 0.366 | 9.3 | | | 55.56 | 9.73 |
| C00300006016 | | | | 0.025 | 0.63 | 0.630 | 16 | | | 0.063 | 1.6 | 0.531 | 13.5 | 0.472 | 12.0 | 4.41 | 19.61 | 44.44 | 7.78 |
| C00300006020 | | | | | | 0.787 | 20 | | | | | 0.663 | 16.9 | 0.591 | 15.0 | | | 35.56 | 6.23 |
| C00300006025 | | | | | | 0.984 | 25 | | | | | 0.828 | 21.0 | 0.736 | 18.7 | | | 28.22 | 4.94 |
| C00300006032 | | | | | | 1.260 | 32 | | | | | 1.061 | 27.0 | 0.945 | 24.0 | | | 22.22 | 3.89 |
| C00300006040 | | | | | | 1.575 | 40 | | | | | 1.327 | 33.7 | 1.181 | 30.0 | | | 17.78 | 3.11 |
| C00300006050 | | | | | | 1.969 | 50 | | | | | 1.658 | 42.1 | 1.476 | 37.5 | | | 14.22 | 2.49 |
| C00300006063 | | | | | | 2.480 | 63 | | | | | 2.083 | 52.9 | 1.850 | 47.0 | | | 11.11 | 1.95 |
| C00309003010 | | | | | | 0.394 | 10 | | | | | 0.197 | 5.0 | 0.079 | 2.0 | | | 1.40 | 0.25 |
| C00309003013 | | | | | | 0.492 | 12.5 | | | | | 0.244 | 6.2 | 0.098 | 2.5 | | | 1.11 | 0.19 |
| C00309003016 | | | | | | 0.630 | 16 | | | | | 0.315 | 8.0 | 0.126 | 3.2 | | | 0.88 | 0.15 |
| C00309003020 | | 0.122 | 3.09 | 0.010 | 0.25 | 0.787 | 20 | 0.130 | 3.3 | 0.098 | 2.5 | 0.394 | 10.0 | 0.157 | 4.0 | 0.28 | 1.23 | 0.70 | 0.12 |
| C00309003025 | | | | | | 0.984 | 25 | | | | | 0.492 | 12.5 | 0.197 | 5.0 | | | 0.56 | 0.10 |
| C00309003032 | | | | | | 1.260 | 32 | | | | | 0.630 | 16.0 | 0.252 | 6.4 | | | 0.44 | 0.08 |
| C00309003040 | | | | | | 1.575 | 40 | | | | | 0.787 | 20.0 | 0.315 | 8.0 | | | 0.35 | 0.06 |
| C00320004010 | | | | | | 0.394 | 10 | | | | | 0.244 | 6.2 | 0.157 | 4.0 | | | 8.25 | 1.45 |
| C00320004013 | | | | | | 0.492 | 12.5 | | | | | 0.303 | 7.7 | 0.197 | 5.0 | | | 6.53 | 1.14 |
| C00320004016 | | | | | | 0.630 | 16 | | | | | 0.394 | 10.0 | 0.252 | 6.4 | | | 5.23 | 0.92 |
| C00320004020 | | 0.126 | 3.2 | 0.016 | 0.4 | 0.787 | 20 | 0.134 | 3.4 | 0.089 | 2.3 | 0.492 | 12.5 | 0.315 | 8.0 | 1.23 | 5.49 | 4.18 | 0.73 |
| C00320004025 | | | | | | 0.984 | 25 | | | | | 0.606 | 15.4 | 0.394 | 10.0 | | | 3.27 | 0.57 |
| C00320004032 | RH 向右 | | | | | 1.260 | 32 | | | | | 0.787 | 20.0 | 0.512 | 13.0 | | | 2.61 | 0.46 |
| C00320004040 | | | | | | 1.575 | 40 | | | | | 0.984 | 25.0 | 0.630 | 16.0 | | | 2.09 | 0.37 |
| C00320004050 | | | | | | 1.969 | 50 | | | | | 1.220 | 31.0 | 0.787 | 20.0 | | | 1.65 | 0.29 |
| C00330007005 | | | | | | 0.197 | 5 | | | | | 0.166 | 4.2 | 0.148 | 3.8 | | | 177.78 | 31.14 |
| C00330007006 | | | | | | 0.248 | 6.3 | | | | | 0.208 | 5.3 | 0.185 | 4.7 | | | 138.89 | 24.33 |
| C00330007008 | | 0.130 | 3.3 | 0.028 | 0.7 | 0.315 | 8 | 0.142 | 3.6 | 0.071 | 1.8 | 0.265 | 6.7 | 0.236 | 6.0 | 5.51 | 24.52 | 111.11 | 19.46 |
| C00330007010 | | | | | | 0.394 | 10 | | | | | 0.327 | 8.3 | 0.287 | 7.3 | | | 82.30 | 14.42 |
| C00330007013 | LH 向左 | | | | | 0.492 | 12.5 | | | | | 0.413 | 10.5 | 0.366 | 9.3 | | | 69.44 | 12.16 |
| C00330007016 | | | | | | 0.630 | 16 | | | | | 0.531 | 13.5 | 0.472 | 12.0 | | | 55.56 | 9.73 |

## HIGH PERFORMANCE COMPRESSION SPRINGS
## 高性能压缩弹簧

| Catalog Number 编号 | Coil Dir. 线圈方向 | Outside Diameter (OD) 外径（OD） | | Wire Diameter (d) 线径 (d) | | Free Length (L) Approx. 近似自由长度 (L) | | Fits in Hole Size (H) 孔配合直径 (H) | | Fits over Shaft (R) 轴配合直径(R) | | Load Length ($L_1$) 承载长度($L_1$) | | Solid Height (Sh) Approx. 固定状态下的高度 (Sh) | | Load (P) at $L_1$ +/-10% $L_1$的载荷（P）+/-10% | | Spring Rate (R) Reference Only 弹性系数(R)，仅供参考 | |
|---|---|---|---|---|---|---|---|---|---|---|---|---|---|---|---|---|---|---|---|
| | | in | mm | in | mm | in | mm | in | mm | in | mm | in | mm | in | mm | lb | N | lb/in | N/mm |
| C00330007020 | | | | | | 0.787 | 20 | | | | | 0.663 | 16.9 | 0.591 | 15.0 | | | 44.44 | 7.78 |
| C00330007025 | | | | | | 0.984 | 25 | | | | | 0.828 | 21.0 | 0.736 | 18.7 | | | 35.27 | 6.18 |
| C00330007032 | | 0.130 | 3.3 | 0.028 | 0.7 | 1.260 | 32 | | | 0.071 | 1.8 | 1.061 | 27.0 | 0.945 | 24.0 | 5.51 | 24.52 | 27.78 | 4.87 |
| C00330007040 | | | | | | 1.575 | 40 | | | | | 1.327 | 33.7 | 1.181 | 30.0 | | | 22.22 | 3.89 |
| C00330007050 | | | | | | 1.969 | 50 | | | | | 1.658 | 42.1 | 1.476 | 37.5 | | | 17.78 | 3.11 |
| C00330007063 | | | | | | 2.480 | 63 | | | | | 2.083 | 52.9 | 1.850 | 47.0 | | | 13.89 | 2.43 |
| C00332005006 | | | | | | 0.248 | 6.3 | | | | | 0.169 | 4.3 | 0.122 | 3.1 | | | 28.00 | 4.90 |
| C00332005008 | | | | | | 0.315 | 8 | | | | | 0.217 | 5.5 | 0.157 | 4.0 | | | 22.40 | 3.92 |
| C00332005010 | | | | | | 0.394 | 10 | | | | | 0.268 | 6.8 | 0.197 | 5.0 | | | 17.50 | 3.07 |
| C00332005013 | | | | | | 0.492 | 12.5 | | | | | 0.335 | 8.5 | 0.244 | 6.2 | | | 14.00 | 2.45 |
| C00332005016 | LH 向左 | 0.131 | 3.32 | 0.020 | 0.5 | 0.630 | 16 | | | 0.089 | 2.3 | 0.433 | 11.0 | 0.315 | 8.0 | 2.21 | 9.81 | 11.20 | 1.96 |
| C00332005020 | | | | | | 0.787 | 20 | | | | | 0.539 | 13.7 | 0.394 | 10.0 | | | 8.89 | 1.56 |
| C00332005025 | | | | | | 0.984 | 25 | | | | | 0.669 | 17.0 | 0.492 | 12.5 | | | 7.00 | 1.23 |
| C00332005032 | | | | | | 1.260 | 32 | | | | | 0.866 | 22.0 | 0.630 | 16.0 | | | 5.60 | 0.98 |
| C00332005040 | | | | | | 1.575 | 40 | | | | | 1.083 | 27.5 | 0.787 | 20.0 | | | 4.48 | 0.78 |
| C00332005050 | | | | | | 1.969 | 50 | | | | | 1.339 | 34.0 | 0.984 | 25.0 | | | 3.50 | 0.61 |
| C00336006006 | | | | | | 0.248 | 6.3 | | | | | 0.193 | 4.9 | 0.161 | 4.1 | | | 72.73 | 12.74 |
| C00336006008 | | | | | | 0.315 | 8 | | | | | 0.246 | 6.2 | 0.205 | 5.2 | | | 57.14 | 10.01 |
| C00336006010 | | | | | | 0.394 | 10 | 0.142 | 3.6 | | | 0.304 | 7.7 | 0.252 | 6.4 | | | 44.44 | 7.78 |
| C00336006013 | | | | | | 0.492 | 12.5 | | | | | 0.381 | 9.7 | 0.315 | 8.0 | | | 35.56 | 6.23 |
| C00336006016 | | | | | | 0.630 | 16 | | | | | 0.491 | 12.5 | 0.409 | 10.4 | | | 28.57 | 5.00 |
| C00336006020 | | 0.132 | 3.36 | 0.025 | 0.63 | 0.787 | 20 | | | 0.079 | 2.0 | 0.614 | 15.6 | 0.512 | 13.0 | 3.97 | 17.65 | 22.86 | 4.00 |
| C00336006025 | | | | | | 0.984 | 25 | | | | | 0.761 | 19.3 | 0.630 | 16.0 | | | 17.78 | 3.11 |
| C00336006032 | | | | | | 1.260 | 32 | | | | | 0.982 | 24.9 | 0.819 | 20.8 | | | 14.29 | 2.50 |
| C00336006040 | RH 向右 | | | | | 1.575 | 40 | | | | | 1.228 | 31.2 | 1.024 | 26.0 | | | 11.43 | 2.00 |
| C00336006050 | | | | | | 1.969 | 50 | | | | | 1.522 | 38.7 | 1.260 | 32.0 | | | 8.89 | 1.56 |
| C00336006063 | | | | | | 2.480 | 63 | | | | | 1.922 | 48.8 | 1.594 | 40.5 | | | 7.11 | 1.25 |
| C00337004005 | | | | | | 0.197 | 5 | | | | | 0.110 | 2.8 | 0.055 | 1.4 | | | 9.16 | 1.61 |
| C00337004006 | | | | | | 0.248 | 6.3 | | | | | 0.138 | 3.5 | 0.071 | 1.8 | | | 7.20 | 1.26 |
| C00337004008 | | | | | | 0.315 | 8 | | | | | 0.173 | 4.4 | 0.094 | 2.4 | | | 5.60 | 0.98 |
| C00337004010 | | | | | | 0.394 | 10 | | | | | 0.217 | 5.5 | 0.118 | 3.0 | | | 4.48 | 0.78 |
| C00337004013 | | | | | | 0.492 | 12.5 | | | | | 0.272 | 6.9 | 0.177 | 4.5 | | | 3.60 | 0.63 |
| C00337004016 | | 0.133 | 3.37 | 0.014 | 0.36 | 0.630 | 16 | | | 0.098 | 2.5 | 0.354 | 9.0 | 0.189 | 4.8 | 0.79 | 3.53 | 2.88 | 0.50 |
| C00337004020 | | | | | | 0.787 | 20 | | | | | 0.433 | 11.0 | 0.236 | 6.0 | | | 2.24 | 0.39 |
| C00337004025 | | | | | | 0.984 | 25 | | | | | 0.543 | 13.8 | 0.276 | 7.0 | | | 1.80 | 0.32 |
| C00337004032 | LH 向左 | | | | | 1.260 | 32 | | | | | 0.709 | 18.0 | 0.374 | 9.5 | | | 1.44 | 0.25 |
| C00337004040 | | | | | | 1.575 | 40 | | | | | 0.866 | 22.0 | 0.472 | 12.0 | | | 1.12 | 0.20 |
| C00337004050 | | | | | | 1.969 | 50 | | | | | 1.083 | 27.5 | 0.551 | 14.0 | | | 0.90 | 0.16 |
| C00337004063 | | | | | | 2.480 | 63 | | | | | 1.378 | 35.0 | 0.709 | 18.0 | | | 0.72 | 0.13 |
| C00347003010 | | | | | | 0.394 | 10 | | | | | 0.197 | 5.0 | 0.079 | 2.0 | | | 1.79 | 0.31 |
| C00347003013 | | | | | | 0.492 | 12.5 | | | | | 0.244 | 6.2 | 0.098 | 2.5 | | | 1.42 | 0.25 |
| C00347003016 | | | | | | 0.630 | 16 | | | | | 0.315 | 8.0 | 0.126 | 3.2 | | | 1.12 | 0.20 |
| C00347003020 | | 0.137 | 3.47 | 0.012 | 0.3 | 0.787 | 20 | 0.146 | 3.7 | 0.110 | 2.8 | 0.394 | 10.0 | 0.157 | 4.0 | 0.35 | 1.57 | 0.90 | 0.16 |
| C00347003025 | | | | | | 0.984 | 25 | | | | | 0.492 | 12.5 | 0.197 | 5.0 | | | 0.72 | 0.13 |
| C00347003032 | | | | | | 1.260 | 32 | | | | | 0.630 | 16.0 | 0.252 | 6.4 | | | 0.56 | 0.10 |
| C00347003040 | | | | | | 1.575 | 40 | | | | | 0.787 | 20.0 | 0.315 | 8.0 | | | 0.45 | 0.08 |
| C00347003050 | | | | | | 1.969 | 50 | | | | | 0.984 | 25.0 | 0.394 | 10.0 | | | 0.36 | 0.06 |
| C00355005013 | | | | | | 0.492 | 12.5 | | | | | 0.303 | 7.7 | 0.197 | 5.0 | | | 8.17 | 1.43 |
| C00355005016 | | | | | | 0.630 | 16 | | | | | 0.394 | 10.0 | 0.252 | 6.4 | | | 6.53 | 1.14 |
| C00355005020 | RH 向右 | | | | | 0.787 | 20 | | | | | 0.492 | 12.5 | 0.315 | 8.0 | | | 5.23 | 0.92 |
| C00355005025 | | 0.140 | 3.55 | 0.018 | 0.45 | 0.984 | 25 | 0.150 | 3.8 | 0.098 | 2.5 | 0.606 | 15.4 | 0.394 | 10.0 | 1.54 | 6.86 | 4.08 | 0.72 |
| C00355005032 | | | | | | 1.260 | 32 | | | | | 0.787 | 20.0 | 0.512 | 13.0 | | | 3.27 | 0.57 |
| C00355005040 | | | | | | 1.575 | 40 | | | | | 0.984 | 25.0 | 0.630 | 16.0 | | | 2.61 | 0.46 |
| C00355005050 | | | | | | 1.969 | 50 | | | | | 1.220 | 31.0 | 0.787 | 20.0 | | | 2.06 | 0.36 |
| C00355005063 | | | | | | 2.480 | 63 | | | | | 1.535 | 39.0 | 0.984 | 25.0 | | | 1.63 | 0.29 |
| C00376007032 | | | | | | 1.260 | 32 | | | | | 0.982 | 24.9 | 0.819 | 20.8 | | | 17.86 | 3.13 |
| C00376007040 | | 0.148 | 3.76 | 0.028 | 0.7 | 1.575 | 40 | 0.157 | 4.0 | 0.089 | 2.3 | 1.228 | 31.2 | 1.024 | 26.0 | 4.96 | 22.07 | 14.29 | 2.50 |
| C00376007050 | | | | | | 1.969 | 50 | | | | | 1.522 | 38.7 | 1.260 | 32.0 | | | 11.11 | 1.95 |
| C00376007063 | | | | | | 2.480 | 63 | | | | | 1.922 | 48.8 | 1.594 | 40.5 | | | 8.89 | 1.56 |

## HIGH PERFORMANCE COMPRESSION SPRINGS
## 高性能压缩弹簧

| Catalog Number 编号 | Coil Dir. 线圈方向 | Outside Diameter (OD) 外径（OD） | | Wire Diameter (d) 线径 (d) | | Free Length (L) Approx. 近似自由长度 (L) | | Fits in Hole Size (H) 孔配合直径 (H) | | Fits over Shaft (R) 轴配合直径(R) | | Load Length ($L_1$) 承载长度($L_1$) | | Solid Height (Sh) Approx. 固定状态下的高度 (Sh) | | Load (P) at $L_1$ +/-10% $L_1$的载荷（P）+/-10% | | Spring Rate (R) Reference Only 弹性系数(R)，仅供参考 | |
|---|---|---|---|---|---|---|---|---|---|---|---|---|---|---|---|---|---|---|---|
| | | in | mm | in | mm | in | mm | in | mm | in | mm | in | mm | in | mm | lb | N | lb/in | N/mm |
| C00377005006 | | | | | | 0.248 | 6.3 | | | | | 0.169 | 4.3 | 0.122 | 3.1 | | | 35.00 | 6.13 |
| C00377005008 | LH 向左 | | | | | 0.315 | 8 | | | | | 0.217 | 5.5 | 0.157 | 4.0 | | | 28.00 | 4.90 |
| C00377005010 | | | | | | 0.394 | 10 | | | | | 0.268 | 6.8 | 0.197 | 5.0 | | | 21.88 | 3.83 |
| C00377005013 | | | | | | 0.492 | 12.5 | | | | | 0.335 | 8.5 | 0.244 | 6.2 | | | 17.50 | 3.07 |
| C00377005016 | | | | | | 0.630 | 16 | | | | | 0.433 | 11.0 | 0.315 | 8.0 | | | 14.00 | 2.45 |
| C00377005020 | | 0.148 | 3.77 | 0.022 | 0.56 | 0.787 | 20 | | | 0.098 | 2.5 | 0.539 | 13.7 | 0.394 | 10.0 | 2.76 | 12.26 | 11.11 | 1.95 |
| C00377005025 | | | | | | 0.984 | 25 | | | | | 0.669 | 17.0 | 0.492 | 12.5 | | | 8.75 | 1.53 |
| C00377005032 | | | | | | 1.260 | 32 | | | | | 0.866 | 22.0 | 0.630 | 16.0 | | | 7.00 | 1.23 |
| C00377005040 | | | | | | 1.575 | 40 | | | | | 1.083 | 27.5 | 0.787 | 20.0 | | | 5.60 | 0.98 |
| C00377005050 | | | | | | 1.969 | 50 | | | | | 1.339 | 34.0 | 0.984 | 25.0 | | | 4.38 | 0.77 |
| C00377005063 | | | | | | 2.480 | 63 | | | | | 1.693 | 43.0 | 1.220 | 31.0 | | | 3.50 | 0.61 |
| C00377005080 | | | | | | 3.150 | 80 | | | | | 2.165 | 55.0 | 1.575 | 40.0 | | | 2.80 | 0.49 |
| C00380004005 | | | | | | 0.197 | 5 | 0.157 | 4.0 | | | 0.110 | 2.8 | 0.055 | 1.4 | | | 11.45 | 2.01 |
| C00380004006 | | | | | | 0.248 | 6.3 | | | | | 0.138 | 3.5 | 0.071 | 1.8 | | | 9.00 | 1.58 |
| C00380004008 | | | | | | 0.315 | 8 | | | | | 0.173 | 4.4 | 0.094 | 2.4 | | | 7.00 | 1.23 |
| C00380004010 | | | | | | 0.394 | 10 | | | | | 0.217 | 5.5 | 0.118 | 3.0 | | | 5.60 | 0.98 |
| C00380004013 | LH 向左 | | | | | 0.492 | 12.5 | | | | | 0.272 | 6.9 | 0.177 | 4.5 | | | 4.50 | 0.79 |
| C00380004016 | | | | | | 0.630 | 16 | | | | | 0.354 | 9.0 | 0.189 | 4.8 | | | 3.60 | 0.63 |
| C00380004020 | | 0.150 | 3.8 | 0.016 | 0.4 | 0.787 | 20 | | | 0.110 | 2.8 | 0.433 | 11.0 | 0.236 | 6.0 | 0.99 | 4.41 | 2.80 | 0.49 |
| C00380004025 | | | | | | 0.984 | 25 | | | | | 0.543 | 13.8 | 0.276 | 7.0 | | | 2.25 | 0.39 |
| C00380004032 | | | | | | 1.260 | 32 | | | | | 0.709 | 18.0 | 0.374 | 9.5 | | | 1.80 | 0.32 |
| C00380004040 | | | | | | 1.575 | 40 | | | | | 0.866 | 22.0 | 0.472 | 12.0 | | | 1.40 | 0.25 |
| C00380004050 | | | | | | 1.969 | 50 | | | | | 1.083 | 27.5 | 0.551 | 14.0 | | | 1.12 | 0.20 |
| C00380004063 | | | | | | 2.480 | 63 | | | | | 1.378 | 35.0 | 0.709 | 18.0 | | | 0.90 | 0.16 |
| C00380004080 | | | | | | 3.150 | 80 | | | | | 1.732 | 44.0 | 0.945 | 24.0 | | | 0.70 | 0.12 |
| C00395003010 | | | | | | 0.394 | 10 | | | | | 0.197 | 5.0 | 0.079 | 2.0 | | | 2.24 | 0.39 |
| C00395003013 | | | | | | 0.492 | 12.5 | | | | | 0.244 | 6.2 | 0.098 | 2.5 | | | 1.78 | 0.31 |
| C00395003016 | | | | | | 0.630 | 16 | | | | | 0.315 | 8.0 | 0.126 | 3.2 | | | 1.40 | 0.25 |
| C00395003020 | | 0.156 | 3.95 | 0.013 | 0.32 | 0.787 | 20 | 0.169 | 4.3 | 0.126 | 3.2 | 0.394 | 10.0 | 0.157 | 4.0 | 0.44 | 1.96 | 1.12 | 0.20 |
| C00395003025 | | | | | | 0.984 | 25 | | | | | 0.492 | 12.5 | 0.197 | 5.0 | | | 0.90 | 0.16 |
| C00395003032 | | | | | | 1.260 | 32 | | | | | 0.630 | 16.0 | 0.252 | 6.4 | | | 0.70 | 0.12 |
| C00395003040 | | | | | | 1.575 | 40 | | | | | 0.787 | 20.0 | 0.315 | 8.0 | | | 0.56 | 0.10 |
| C00395003050 | RH 向右 | | | | | 1.969 | 50 | | | | | 0.984 | 25.0 | 0.394 | 10.0 | | | 0.45 | 0.08 |
| C00400005013 | | | | | | 0.492 | 12.5 | | | | | 0.303 | 7.7 | 0.197 | 5.0 | | | 10.50 | 1.84 |
| C00400005016 | | | | | | 0.630 | 16 | | | | | 0.394 | 10.0 | 0.252 | 6.4 | | | 8.40 | 1.47 |
| C00400005020 | | | | | | 0.787 | 20 | | | | | 0.492 | 12.5 | 0.315 | 8.0 | | | 6.72 | 1.18 |
| C00400005025 | | 0.157 | 4 | 0.020 | 0.5 | 0.984 | 25 | 0.165 | 4.2 | 0.110 | 2.8 | 0.606 | 15.4 | 0.394 | 10.0 | 1.98 | 8.83 | 5.25 | 0.92 |
| C00400005032 | | | | | | 1.260 | 32 | | | | | 0.787 | 20.0 | 0.512 | 13.0 | | | 4.20 | 0.74 |
| C00400005040 | | | | | | 1.575 | 40 | | | | | 0.984 | 25.0 | 0.630 | 16.0 | | | 3.36 | 0.59 |
| C00400005050 | | | | | | 1.969 | 50 | | | | | 1.220 | 31.0 | 0.787 | 20.0 | | | 2.65 | 0.46 |
| C00400005063 | LH 向左 | | | | | 2.480 | 63 | | | | | 1.535 | 39.0 | 0.984 | 25.0 | | | 2.10 | 0.37 |
| C00416009006 | | | | | | 0.248 | 6.3 | | | | | 0.208 | 5.3 | 0.185 | 4.7 | | | 222.22 | 38.92 |
| C00416009008 | | | | | | 0.315 | 8 | | | | | 0.265 | 6.7 | 0.236 | 6.0 | | | 177.78 | 31.14 |
| C00416009010 | | | | | | 0.394 | 10 | | | | | 0.327 | 8.3 | 0.287 | 7.3 | | | 131.69 | 23.07 |
| C00416009013 | | | | | | 0.492 | 12.5 | | | | | 0.413 | 10.5 | 0.366 | 9.3 | | | 111.11 | 19.46 |
| C00416009016 | | | | | | 0.630 | 16 | | | | | 0.531 | 13.5 | 0.472 | 12.0 | | | 88.89 | 15.57 |
| C00416009020 | | 0.164 | 4.16 | 0.035 | 0.9 | 0.787 | 20 | | | 0.089 | 2.3 | 0.663 | 16.9 | 0.591 | 15.0 | 8.82 | 39.23 | 71.11 | 12.46 |
| C00416009025 | | | | | | 0.984 | 25 | | | | | 0.828 | 21.0 | 0.736 | 18.7 | | | 56.44 | 9.89 |
| C00416009032 | | | | | | 1.260 | 32 | | | | | 1.061 | 27.0 | 0.945 | 24.0 | | | 44.44 | 7.78 |
| C00416009040 | | | | | | 1.575 | 40 | 0.177 | 4.5 | | | 1.327 | 33.7 | 1.181 | 30.0 | | | 35.56 | 6.23 |
| C00416009050 | | | | | | 1.969 | 50 | | | | | 1.658 | 42.1 | 1.476 | 37.5 | | | 28.44 | 4.98 |
| C00416009063 | | | | | | 2.480 | 63 | | | | | 2.083 | 52.9 | 1.850 | 47.0 | | | 22.22 | 3.89 |
| C00420005006 | | | | | | 0.248 | 6.3 | | | | | 0.138 | 3.5 | 0.071 | 1.8 | | | 11.20 | 1.96 |
| C00420005008 | | | | | | 0.315 | 8 | | | | | 0.173 | 4.4 | 0.094 | 2.4 | | | 8.71 | 1.53 |
| C00420005010 | RH 向右 | | | | | 0.394 | 10 | | | | | 0.217 | 5.5 | 0.118 | 3.0 | | | 6.97 | 1.22 |
| C00420005013 | | 0.165 | 4.2 | 0.018 | 0.45 | 0.492 | 12.5 | | | 0.126 | 3.2 | 0.272 | 6.9 | 0.177 | 4.5 | 1.23 | 5.49 | 5.60 | 0.98 |
| C00420005016 | | | | | | 0.630 | 16 | | | | | 0.354 | 9.0 | 0.189 | 4.8 | | | 4.48 | 0.78 |
| C00420005020 | | | | | | 0.787 | 20 | | | | | 0.433 | 11.0 | 0.236 | 6.0 | | | 3.48 | 0.61 |
| C00420005025 | | | | | | 0.984 | 25 | | | | | 0.543 | 13.8 | 0.276 | 7.0 | | | 2.80 | 0.49 |

## HIGH PERFORMANCE COMPRESSION SPRINGS
## 高性能压缩弹簧

| Catalog Number 编号 | Coil Dir. 线圈方向 | Outside Diameter (OD) 外径（OD） | | Wire Diameter (d) 线径 (d) | | Free Length (L) Approx. 近似自由长度 (L) | | Fits in Hole Size (H) 孔配合直径 (H) | | Fits over Shaft (R) 轴配合直径(R) | | Load Length ($L_1$) 承载长度($L_1$) | | Solid Height (Sh) Approx. 固定状态下的高度 (Sh) | | Load (P) at $L_1$ +/-10% $L_1$的载荷（P）+/-10% | | Spring Rate (R) Reference Only 弹性系数(R)，仅供参考 | |
|---|---|---|---|---|---|---|---|---|---|---|---|---|---|---|---|---|---|---|---|
| | | in | mm | in | mm | in | mm | in | mm | in | mm | in | mm | in | mm | lb | N | lb/in | N/mm |
| C00420005032 | | | | | | 1.260 | 32 | | | | | 0.709 | 18.0 | 0.374 | 9.5 | | | 2.24 | 0.39 |
| C00420005040 | | | | | | 1.575 | 40 | | | | | 0.866 | 22.0 | 0.472 | 12.0 | | | 1.74 | 0.31 |
| C00420005050 | | 0.165 | 4.2 | 0.018 | 0.45 | 1.969 | 50 | | | 0.126 | 3.2 | 1.083 | 27.5 | 0.551 | 14.0 | 1.23 | 5.49 | 1.39 | 0.24 |
| C00420005063 | | | | | | 2.480 | 63 | | | | | 1.378 | 35.0 | 0.709 | 18.0 | | | 1.12 | 0.20 |
| C00420005080 | | | | | | 3.150 | 80 | | | | | 1.732 | 44.0 | 0.945 | 24.0 | | | 0.87 | 0.15 |
| C00425008006 | | | | | | 0.248 | 6.3 | | | | | 0.193 | 4.9 | 0.161 | 4.1 | | | 113.13 | 19.82 |
| C00425008008 | | | | | | 0.315 | 8 | | | | | 0.246 | 6.2 | 0.205 | 5.2 | | | 88.89 | 15.57 |
| C00425008010 | | | | | | 0.394 | 10 | | | | | 0.304 | 7.7 | 0.252 | 6.4 | | | 69.14 | 12.11 |
| C00425008013 | | | | | | 0.492 | 12.5 | | | | | 0.381 | 9.7 | 0.315 | 8.0 | | | 55.31 | 9.69 |
| C00425008016 | | | | | | 0.630 | 16 | | | | | 0.491 | 12.5 | 0.409 | 10.4 | | | 44.44 | 7.78 |
| C00425008020 | | 0.167 | 4.25 | 0.031 | 0.8 | 0.787 | 20 | | | 0.098 | 2.5 | 0.614 | 15.6 | 0.512 | 13.0 | 6.17 | 27.46 | 35.56 | 6.23 |
| C00425008025 | | | | | | 0.984 | 25 | | | | | 0.761 | 19.3 | 0.630 | 16.0 | | | 27.65 | 4.84 |
| C00425008032 | RH 向右 | | | | | 1.260 | 32 | | | | | 0.982 | 24.9 | 0.819 | 20.8 | | | 22.22 | 3.89 |
| C00425008040 | | | | | | 1.575 | 40 | | | | | 1.228 | 31.2 | 1.024 | 26.0 | | | 17.78 | 3.11 |
| C00425008050 | | | | | | 1.969 | 50 | 0.177 | 4.5 | | | 1.522 | 38.7 | 1.260 | 32.0 | | | 13.83 | 2.42 |
| C00425008063 | | | | | | 2.480 | 63 | | | | | 1.922 | 48.8 | 1.594 | 40.5 | | | 11.06 | 1.94 |
| C00426006006 | | | | | | 0.248 | 6.3 | | | | | 0.169 | 4.3 | 0.122 | 3.1 | | | 44.80 | 7.85 |
| C00426006008 | | | | | | 0.315 | 8 | | | | | 0.217 | 5.5 | 0.157 | 4.0 | | | 35.84 | 6.28 |
| C00426006010 | | | | | | 0.394 | 10 | | | | | 0.268 | 6.8 | 0.197 | 5.0 | | | 28.00 | 4.90 |
| C00426006013 | | | | | | 0.492 | 12.5 | | | | | 0.335 | 8.5 | 0.244 | 6.2 | | | 22.40 | 3.92 |
| C00426006016 | | | | | | 0.630 | 16 | | | | | 0.433 | 11.0 | 0.315 | 8.0 | | | 17.92 | 3.14 |
| C00426006020 | | 0.168 | 4.26 | 0.025 | 0.63 | 0.787 | 20 | | | 0.110 | 2.8 | 0.539 | 13.7 | 0.394 | 10.0 | 3.53 | 15.69 | 14.22 | 2.49 |
| C00426006025 | | | | | | 0.984 | 25 | | | | | 0.669 | 17.0 | 0.492 | 12.5 | | | 11.20 | 1.96 |
| C00426006032 | | | | | | 1.260 | 32 | | | | | 0.866 | 22.0 | 0.630 | 16.0 | | | 8.96 | 1.57 |
| C00426006040 | | | | | | 1.575 | 40 | | | | | 1.083 | 27.5 | 0.787 | 20.0 | | | 7.17 | 1.26 |
| C00426006050 | | | | | | 1.969 | 50 | | | | | 1.339 | 34.0 | 0.984 | 25.0 | | | 5.60 | 0.98 |
| C00426006063 | | | | | | 2.480 | 63 | | | | | 1.693 | 43.0 | 1.220 | 31.0 | | | 4.48 | 0.78 |
| C00426006080 | | | | | | 3.150 | 80 | | | | | 2.165 | 55.0 | 1.575 | 40.0 | | | 3.58 | 0.63 |
| C00465010020 | | | | | | 0.787 | 20 | | | | | 0.663 | 16.9 | 0.591 | 15.0 | | | 88.89 | 15.57 |
| C00465010025 | LH 向左 | | | | | 0.984 | 25 | | | | | 0.828 | 21.0 | 0.736 | 18.7 | | | 70.55 | 12.36 |
| C00465010032 | | 0.183 | 4.65 | 0.039 | 1 | 1.260 | 32 | | | 0.098 | 2.5 | 1.061 | 27.0 | 0.945 | 24.0 | 11.03 | 49.04 | 55.56 | 9.73 |
| C00465010040 | | | | | | 1.575 | 40 | | | | | 1.327 | 33.7 | 1.181 | 30.0 | | | 44.44 | 7.78 |
| C00465010050 | | | | | | 1.969 | 50 | | | | | 1.658 | 42.1 | 1.476 | 37.5 | | | 35.56 | 6.23 |
| C00465010063 | | | | | | 2.480 | 63 | | | | | 2.083 | 52.9 | 1.850 | 47.0 | | | 27.78 | 4.87 |
| C00470007008 | | | | | | 0.315 | 8 | | | | | 0.217 | 5.5 | 0.157 | 4.0 | | | 44.80 | 7.85 |
| C00470007010 | | | | | | 0.394 | 10 | | | | | 0.268 | 6.8 | 0.197 | 5.0 | | | 35.00 | 6.13 |
| C00470007013 | | | | | | 0.492 | 12.5 | | | | | 0.335 | 8.5 | 0.244 | 6.2 | | | 28.00 | 4.90 |
| C00470007016 | | | | | | 0.630 | 16 | | | | | 0.433 | 11.0 | 0.315 | 8.0 | | | 22.40 | 3.92 |
| C00470007020 | | | | | | 0.787 | 20 | | | | | 0.539 | 13.7 | 0.394 | 10.0 | | | 17.78 | 3.11 |
| C00470007025 | | 0.185 | 4.7 | 0.028 | 0.7 | 0.984 | 25 | 0.197 | 5.0 | 0.126 | 3.2 | 0.669 | 17.0 | 0.492 | 12.5 | 4.41 | 19.61 | 14.00 | 2.45 |
| C00470007032 | | | | | | 1.260 | 32 | | | | | 0.866 | 22.0 | 0.630 | 16.0 | | | 11.20 | 1.96 |
| C00470007040 | | | | | | 1.575 | 40 | | | | | 1.083 | 27.5 | 0.787 | 20.0 | | | 8.96 | 1.57 |
| C00470007050 | | | | | | 1.969 | 50 | | | | | 1.339 | 34.0 | 0.984 | 25.0 | | | 7.00 | 1.23 |
| C00470007063 | | | | | | 2.480 | 63 | | | | | 1.693 | 43.0 | 1.220 | 31.0 | | | 5.60 | 0.98 |
| C00470007080 | RH 向右 | | | | | 3.150 | 80 | | | | | 2.165 | 55.0 | 1.575 | 40.0 | | | 4.48 | 0.78 |
| C00470007100 | | | | | | 3.937 | 100 | | | | | 2.677 | 68.0 | 1.969 | 50.0 | | | 3.50 | 0.61 |
| C00480009020 | | | | | | 0.787 | 20 | | | | | 0.614 | 15.6 | 0.512 | 13.0 | | | 45.71 | 8.01 |
| C00480009025 | | | | | | 0.984 | 25 | | | | | 0.761 | 19.3 | 0.630 | 16.0 | | | 35.56 | 6.23 |
| C00480009032 | | | | | | 1.260 | 32 | | | | | 0.982 | 24.9 | 0.819 | 20.8 | | | 28.57 | 5.00 |
| C00480009040 | | 0.189 | 4.8 | 0.035 | 0.9 | 1.575 | 40 | | | 0.110 | 2.8 | 1.228 | 31.2 | 1.024 | 26.0 | 7.94 | 35.31 | 22.86 | 4.00 |
| C00480009050 | | | | | | 1.969 | 50 | | | | | 1.522 | 38.7 | 1.260 | 32.0 | | | 17.78 | 3.11 |
| C00480009063 | | | | | | 2.480 | 63 | | | | | 1.922 | 48.8 | 1.594 | 40.5 | | | 14.22 | 2.49 |
| C00480009080 | | | | | | 3.150 | 80 | | | | | 2.455 | 62.4 | 2.047 | 52.0 | | | 11.43 | 2.00 |
| C00494004013 | | | | | | 0.492 | 12.5 | | | | | 0.244 | 6.2 | 0.098 | 2.5 | | | 2.84 | 0.50 |
| C00494004016 | LH 向左 | | | | | 0.630 | 16 | | | | | 0.315 | 8.0 | 0.126 | 3.2 | | | 2.24 | 0.39 |
| C00494004020 | | 0.194 | 4.94 | 0.016 | 0.4 | 0.787 | 20 | 0.205 | 5.2 | 0.157 | 4.0 | 0.394 | 10.0 | 0.157 | 4.0 | 0.71 | 3.14 | 1.79 | 0.31 |
| C00494004025 | | | | | | 0.984 | 25 | | | | | 0.492 | 12.5 | 0.197 | 5.0 | | | 1.43 | 0.25 |
| C00494004032 | | | | | | 1.260 | 32 | | | | | 0.630 | 16.0 | 0.252 | 6.4 | | | 1.12 | 0.20 |
| C00494004040 | | | | | | 1.575 | 40 | | | | | 0.787 | 20.0 | 0.315 | 8.0 | | | 0.90 | 0.16 |

## HIGH PERFORMANCE COMPRESSION SPRINGS
## 高性能压缩弹簧

| Catalog Number 编号 | Coil Dir. 线圈方向 | Outside Diameter (OD) 外径（OD） | | Wire Diameter (d) 线径 (d) | | Free Length (L) Approx. 近似自由长度 (L) | | Fits in Hole Size (H) 孔配合直径 (H) | | Fits over Shaft (R) 轴配合直径(R) | | Load Length ($L_1$) 承载长度($L_1$) | | Solid Height (Sh) Approx. 固定状态下的高度 (Sh) | | Load (P) at $L_1$ +/-10% $L_1$的载荷（P）+/-10% | | Spring Rate (R) Reference Only 弹性系数(R)，仅供参考 | |
|---|---|---|---|---|---|---|---|---|---|---|---|---|---|---|---|---|---|---|---|
| | | in | mm | in | mm | in | mm | in | mm | in | mm | in | mm | in | mm | lb | N | lb/in | N/mm |
| C00494004050 | | 0.194 | 4.94 | 0.016 | 0.4 | 1.969 | 50 | 0.205 | 5.2 | 0.157 | 4.0 | 0.984 | 25.0 | 0.394 | 10.0 | 0.71 | 3.14 | 0.72 | 0.13 |
| C00494004063 | | | | | | 2.480 | 63 | | | | | 1.220 | 31.0 | 0.496 | 12.6 | | | 0.56 | 0.10 |
| C00510007016 | LH 向左 | | | | | 0.630 | 16 | | | | | 0.394 | 10.0 | 0.252 | 6.4 | | | 13.07 | 2.29 |
| C00510007020 | | | | | | 0.787 | 20 | | | | | 0.492 | 12.5 | 0.315 | 8.0 | | | 10.45 | 1.83 |
| C00510007025 | | | | | | 0.984 | 25 | | | | | 0.606 | 15.4 | 0.394 | 10.0 | | | 8.17 | 1.43 |
| C00510007032 | | | | | | 1.260 | 32 | | | | | 0.787 | 20.0 | 0.512 | 13.0 | | | 6.53 | 1.14 |
| C00510007040 | | 0.201 | 5.1 | 0.026 | 0.65 | 1.575 | 40 | 0.213 | 5.4 | 0.142 | 3.6 | 0.984 | 25.0 | 0.630 | 16.0 | 3.09 | 13.73 | 5.23 | 0.92 |
| C00510007050 | | | | | | 1.969 | 50 | | | | | 1.220 | 31.0 | 0.787 | 20.0 | | | 4.13 | 0.72 |
| C00510007063 | | | | | | 2.480 | 63 | | | | | 1.535 | 39.0 | 0.984 | 25.0 | | | 3.27 | 0.57 |
| C00510007080 | | | | | | 3.150 | 80 | | | | | 1.969 | 50.0 | 1.260 | 32.0 | | | 2.61 | 0.46 |
| C00510007100 | | | | | | 3.937 | 100 | | | | | 2.441 | 62.0 | 1.575 | 40.0 | | | 2.06 | 0.36 |
| C00512011006 | | | | | | 0.248 | 6.3 | | | | | 0.208 | 5.3 | 0.185 | 4.7 | | | 350.00 | 61.30 |
| C00512011008 | | | | | | 0.315 | 8 | | | | | 0.265 | 6.7 | 0.236 | 6.0 | | | 280.00 | 49.04 |
| C00512011010 | | | | | | 0.394 | 10 | | | | | 0.327 | 8.3 | 0.287 | 7.3 | | | 207.41 | 36.33 |
| C00512011013 | | | | | | 0.492 | 12.5 | | | | | 0.413 | 10.5 | 0.366 | 9.3 | | | 175.00 | 30.65 |
| C00512011016 | | | | | | 0.630 | 16 | | | | | 0.531 | 13.5 | 0.472 | 12.0 | | | 140.00 | 24.52 |
| C00512011020 | | 0.202 | 5.12 | 0.044 | 1.12 | 0.787 | 20 | 0.220 | 5.6 | 0.110 | 2.8 | 0.663 | 16.9 | 0.591 | 15.0 | 13.89 | 61.78 | 112.00 | 19.62 |
| C00512011025 | LH 向左 | | | | | 0.984 | 25 | | | | | 0.828 | 21.0 | 0.736 | 18.7 | | | 88.89 | 15.57 |
| C00512011032 | | | | | | 1.260 | 32 | | | | | 1.061 | 27.0 | 0.945 | 24.0 | | | 70.00 | 12.26 |
| C00512011040 | | | | | | 1.575 | 40 | | | | | 1.327 | 33.7 | 1.181 | 30.0 | | | 56.00 | 9.81 |
| C00512011050 | | | | | | 1.969 | 50 | | | | | 1.658 | 42.1 | 1.476 | 37.5 | | | 44.80 | 7.85 |
| C00512011063 | | | | | | 2.480 | 63 | | | | | 2.083 | 52.9 | 1.850 | 47.0 | | | 35.00 | 6.13 |
| C00512011080 | | | | | | 3.150 | 80 | | | | | 2.654 | 67.4 | 2.362 | 60.0 | | | 28.00 | 4.90 |
| C00640008025 | | | | | | 0.984 | 25 | | | | | 0.606 | 15.4 | 0.394 | 10.0 | | | 12.83 | 2.25 |
| C00640008032 | | | | | | 1.260 | 32 | | | | | 0.787 | 20.0 | 0.512 | 13.0 | | | 10.27 | 1.80 |
| C00640008040 | | | | | | 1.575 | 40 | | | | | 0.984 | 25.0 | 0.630 | 16.0 | | | 8.21 | 1.44 |
| C00640008050 | | 0.252 | 6.4 | 0.031 | 0.8 | 1.969 | 50 | 0.268 | 6.8 | 0.177 | 4.5 | 1.220 | 31.0 | 0.787 | 20.0 | 4.85 | 21.58 | 6.48 | 1.14 |
| C00640008063 | | | | | | 2.480 | 63 | | | | | 1.535 | 39.0 | 0.984 | 25.0 | | | 5.13 | 0.90 |
| C00640008080 | | | | | | 3.150 | 80 | | | | | 1.969 | 50.0 | 1.260 | 32.0 | | | 4.11 | 0.72 |
| C00640008100 | | | | | | 3.937 | 100 | | | | | 2.441 | 62.0 | 1.575 | 40.0 | | | 3.24 | 0.57 |
| C00640008125 | | | | | | 4.921 | 125 | | | | | 3.031 | 77.0 | 1.969 | 50.0 | | | 2.57 | 0.45 |
| C00660014008 | | | | | | 0.315 | 8 | | | | | 0.265 | 6.7 | 0.236 | 6.0 | | | 444.44 | 77.85 |
| C00660014010 | | | | | | 0.394 | 10 | | | | | 0.327 | 8.3 | 0.287 | 7.3 | | | 329.22 | 57.66 |
| C00660014013 | | | | | | 0.492 | 12.5 | | | | | 0.413 | 10.5 | 0.366 | 9.3 | | | 277.78 | 48.65 |
| C00660014016 | | | | | | 0.630 | 16 | | | | | 0.531 | 13.5 | 0.472 | 12.0 | | | 222.22 | 38.92 |
| C00660014020 | | | | | | 0.787 | 20 | | | | | 0.663 | 16.9 | 0.591 | 15.0 | | | 177.78 | 31.14 |
| C00660014025 | | 0.260 | 6.6 | 0.055 | 1.4 | 0.984 | 25 | | | 0.142 | 3.6 | 0.828 | 21.0 | 0.736 | 18.7 | 22.05 | 98.07 | 141.09 | 24.71 |
| C00660014032 | | | | | | 1.260 | 32 | | | | | 1.061 | 27.0 | 0.945 | 24.0 | | | 111.11 | 19.46 |
| C00660014040 | RH 向右 | | | | | 1.575 | 40 | | | | | 1.327 | 33.7 | 1.181 | 30.0 | | | 88.89 | 15.57 |
| C00660014050 | | | | | | 1.969 | 50 | | | | | 1.658 | 42.1 | 1.476 | 37.5 | | | 71.11 | 12.46 |
| C00660014063 | | | | | | 2.480 | 63 | | | | | 2.083 | 52.9 | 1.850 | 47.0 | | | 55.56 | 9.73 |
| C00660014080 | | | | | | 3.150 | 80 | | | | | 2.654 | 67.4 | 2.362 | 60.0 | | | 44.44 | 7.78 |
| C00670007010 | | | | | | 0.394 | 10 | 0.276 | 7.0 | | | 0.217 | 5.5 | 0.118 | 3.0 | | | 17.42 | 3.05 |
| C00670007013 | | | | | | 0.492 | 12.5 | | | | | 0.272 | 6.9 | 0.177 | 4.5 | | | 14.00 | 2.45 |
| C00670007016 | | | | | | 0.630 | 16 | | | | | 0.354 | 9.0 | 0.189 | 4.8 | | | 11.20 | 1.96 |
| C00670007020 | | | | | | 0.787 | 20 | | | | | 0.433 | 11.0 | 0.236 | 6.0 | | | 8.71 | 1.53 |
| C00670007025 | | | | | | 0.984 | 25 | | | | | 0.543 | 13.8 | 0.276 | 7.0 | | | 7.00 | 1.23 |
| C00670007032 | | | | | | 1.260 | 32 | | | | | 0.709 | 18.0 | 0.374 | 9.5 | | | 5.60 | 0.98 |
| C00670007040 | | 0.264 | 6.7 | 0.028 | 0.7 | 1.575 | 40 | | | 0.197 | 5.0 | 0.866 | 22.0 | 0.472 | 12.0 | 3.09 | 13.73 | 4.36 | 0.76 |
| C00670007050 | | | | | | 1.969 | 50 | | | | | 1.083 | 27.5 | 0.551 | 14.0 | | | 3.48 | 0.61 |
| C00670007063 | | | | | | 2.480 | 63 | | | | | 1.378 | 35.0 | 0.709 | 18.0 | | | 2.80 | 0.49 |
| C00670007080 | | | | | | 3.150 | 80 | | | | | 1.732 | 44.0 | 0.945 | 24.0 | | | 2.18 | 0.38 |
| C00670007100 | | | | | | 3.937 | 100 | | | | | 2.165 | 55.0 | 1.181 | 30.0 | | | 1.74 | 0.31 |
| C00670007125 | | | | | | 4.921 | 125 | | | | | 2.717 | 69.0 | 1.378 | 35.0 | | | 1.40 | 0.25 |
| C00670007160 | LH 向左 | | | | | 6.299 | 160 | | | | | 3.543 | 90.0 | 1.890 | 48.0 | | | 1.12 | 0.20 |
| C00800010025 | | | | | | 0.984 | 25 | | | | | 0.606 | 15.4 | 0.394 | 10.0 | | | 21.00 | 3.68 |
| C00800010032 | | 0.315 | 8 | 0.039 | 1 | 1.260 | 32 | 0.331 | 8.4 | 0.220 | 5.6 | 0.787 | 20.0 | 0.512 | 13.0 | 7.94 | 35.31 | 16.80 | 2.94 |
| C00800010040 | | | | | | 1.575 | 40 | | | | | 0.984 | 25.0 | 0.630 | 16.0 | | | 13.44 | 2.35 |
| C00800010050 | | | | | | 1.969 | 50 | | | | | 1.220 | 31.0 | 0.787 | 20.0 | | | 10.61 | 1.86 |

## HIGH PERFORMANCE COMPRESSION SPRINGS
## 高性能压缩弹簧

| Catalog Number 编号 | Coil Dir. 线圈方向 | Outside Diameter (OD) 外径（OD） | | Wire Diameter (d) 线径 (d) | | Free Length (L) Approx. 近似自由长度 (L) | | Fits in Hole Size (H) 孔配合直径 (H) | | Fits over Shaft (R) 轴配合直径(R) | | Load Length ($L_1$) 承载长度($L_1$) | | Solid Height (Sh) Approx. 固定状态下的高度 (Sh) | | Load (P) at $L_1$ +/-10% $L_1$的载荷（P）+/-10% | | Spring Rate (R) Reference Only 弹性系数(R)，仅供参考 | |
|---|---|---|---|---|---|---|---|---|---|---|---|---|---|---|---|---|---|---|---|
| | | in | mm | in | mm | in | mm | in | mm | in | mm | in | mm | in | mm | lb | N | lb/in | N/mm |
| C00800010063 | | | | | | 2.480 | 63 | | | | | 1.535 | 39.0 | 0.984 | 25.0 | | | 8.40 | 1.47 |
| C00800010080 | | 0.315 | 8 | 0.039 | 1 | 3.150 | 80 | 0.331 | 8.4 | 0.220 | 5.6 | 1.969 | 50.0 | 1.260 | 32.0 | 7.94 | 35.31 | 6.72 | 1.18 |
| C00800010100 | | | | | | 3.937 | 100 | | | | | 2.441 | 62.0 | 1.575 | 40.0 | | | 5.31 | 0.93 |
| C00800010125 | | | | | | 4.921 | 125 | | | | | 3.031 | 77.0 | 1.969 | 50.0 | | | 4.20 | 0.74 |
| C00850016016 | RH 向右 | | | | | 0.630 | 16 | | | | | 0.491 | 12.5 | 0.409 | 10.4 | | | 177.78 | 31.14 |
| C00850016020 | | | | | | 0.787 | 20 | | | | | 0.614 | 15.6 | 0.512 | 13.0 | | | 142.22 | 24.91 |
| C00850016025 | | | | | | 0.984 | 25 | | | | | 0.761 | 19.3 | 0.630 | 16.0 | | | 110.62 | 19.38 |
| C00850016032 | | | | | | 1.260 | 32 | | | | | 0.982 | 24.9 | 0.819 | 20.8 | | | 88.89 | 15.57 |
| C00850016040 | RH 向右 | 0.335 | 8.5 | 0.063 | 1.6 | 1.575 | 40 | | | 0.197 | 5.0 | 1.228 | 31.2 | 1.024 | 26.0 | 24.70 | 109.84 | 71.11 | 12.46 |
| C00850016050 | | | | | | 1.969 | 50 | | | | | 1.522 | 38.7 | 1.260 | 32.0 | | | 55.31 | 9.69 |
| C00850016063 | | | | | | 2.480 | 63 | | | | | 1.922 | 48.8 | 1.594 | 40.5 | | | 44.25 | 7.75 |
| C00850016080 | | | | | | 3.150 | 80 | | | | | 2.455 | 62.4 | 2.047 | 52.0 | | | 35.56 | 6.23 |
| C00850016100 | | | | | | 3.937 | 100 | | | | | 3.044 | 77.3 | 2.520 | 64.0 | | | 27.65 | 4.84 |
| C00850016125 | | | | | | 4.921 | 125 | | | | | 3.805 | 96.7 | 3.150 | 80.0 | | | 22.12 | 3.88 |
| C00860009010 | | | | | | 0.394 | 10 | | | | | 0.217 | 5.5 | 0.118 | 3.0 | | | 27.38 | 4.80 |
| C00860009013 | LH 向左 | | | | | 0.492 | 12.5 | 0.354 | 9.0 | | | 0.272 | 6.9 | 0.177 | 4.5 | | | 22.00 | 3.85 |
| C00860009016 | | | | | | 0.630 | 16 | | | | | 0.354 | 9.0 | 0.189 | 4.8 | | | 17.60 | 3.08 |
| C00860009020 | | | | | | 0.787 | 20 | | | | | 0.433 | 11.0 | 0.236 | 6.0 | | | 13.69 | 2.40 |
| C00860009025 | | | | | | 0.984 | 25 | | | | | 0.543 | 13.8 | 0.276 | 7.0 | | | 11.00 | 1.93 |
| C00860009032 | | | | | | 1.260 | 32 | | | | | 0.709 | 18.0 | 0.374 | 9.5 | | | 8.80 | 1.54 |
| C00860009040 | | | | | | 1.575 | 40 | | | | | 0.866 | 22.0 | 0.472 | 12.0 | | | 6.84 | 1.20 |
| C00860009050 | | 0.339 | 8.6 | 0.035 | 0.9 | 1.969 | 50 | | | 0.248 | 6.3 | 1.083 | 27.5 | 0.551 | 14.0 | 4.85 | 21.58 | 5.48 | 0.96 |
| C00860009063 | | | | | | 2.480 | 63 | | | | | 1.378 | 35.0 | 0.709 | 18.0 | | | 4.40 | 0.77 |
| C00860009080 | | | | | | 3.150 | 80 | | | | | 1.732 | 44.0 | 0.945 | 24.0 | | | 3.42 | 0.60 |
| C00860009100 | | | | | | 3.937 | 100 | | | | | 2.165 | 55.0 | 1.181 | 30.0 | | | 2.74 | 0.48 |
| C00860009125 | | | | | | 4.921 | 125 | | | | | 2.717 | 69.0 | 1.378 | 35.0 | | | 2.20 | 0.39 |
| C00860009160 | | | | | | 6.299 | 160 | | | | | 3.543 | 90.0 | 1.890 | 48.0 | | | 1.76 | 0.31 |
| C00860009200 | | | | | | 7.874 | 200 | | | | | 4.331 | 110.0 | 2.362 | 60.0 | | | 1.37 | 0.24 |
| C00860009250 | | | | | | 9.843 | 250 | | | | | 5.433 | 138.0 | 2.756 | 70.0 | | | 1.10 | 0.19 |
| C00865007025 | | | | | | 0.984 | 25 | | | | | 0.492 | 12.5 | 0.197 | 5.0 | | | 4.48 | 0.78 |
| C00865007032 | | | | | | 1.260 | 32 | | | | | 0.630 | 16.0 | 0.252 | 6.4 | | | 3.50 | 0.61 |
| C00865007040 | RH 向右 | | | | | 1.575 | 40 | | | | | 0.787 | 20.0 | 0.315 | 8.0 | | | 2.80 | 0.49 |
| C00865007050 | | 0.341 | 8.65 | 0.028 | 0.7 | 1.969 | 50 | 0.358 | 9.1 | 0.276 | 7.0 | 0.984 | 25.0 | 0.394 | 10.0 | 2.21 | 9.81 | 2.24 | 0.39 |
| C00865007063 | | | | | | 2.480 | 63 | | | | | 1.220 | 31.0 | 0.496 | 12.6 | | | 1.75 | 0.31 |
| C00865007080 | | | | | | 3.150 | 80 | | | | | 1.575 | 40.0 | 0.630 | 16.0 | | | 1.40 | 0.25 |
| C00865007100 | | | | | | 3.937 | 100 | | | | | 1.969 | 50.0 | 0.787 | 20.0 | | | 1.12 | 0.20 |
| C00865007125 | | | | | | 4.921 | 125 | | | | | 2.441 | 62.0 | 0.984 | 25.0 | | | 0.89 | 0.16 |
| C00990008025 | | | | | | 0.984 | 25 | | | | | 0.492 | 12.5 | 0.197 | 5.0 | | | 5.60 | 0.98 |
| C00990008032 | | | | | | 1.260 | 32 | | | | | 0.630 | 16.0 | 0.252 | 6.4 | | | 4.38 | 0.77 |
| C00990008040 | | | | | | 1.575 | 40 | | | | | 0.787 | 20.0 | 0.315 | 8.0 | | | 3.50 | 0.61 |
| C00990008050 | | 0.390 | 9.9 | 0.031 | 0.8 | 1.969 | 50 | | | 0.315 | 8.0 | 0.984 | 25.0 | 0.394 | 10.0 | 2.76 | 12.26 | 2.80 | 0.49 |
| C00990008063 | | | | | | 2.480 | 63 | | | | | 1.220 | 31.0 | 0.496 | 12.6 | | | 2.19 | 0.38 |
| C00990008080 | | | | | | 3.150 | 80 | | | | | 1.575 | 40.0 | 0.630 | 16.0 | | | 1.75 | 0.31 |
| C00990008100 | | | | | | 3.937 | 100 | | | | | 1.969 | 50.0 | 0.787 | 20.0 | | | 1.40 | 0.25 |
| C00990008125 | | | | | | 4.921 | 125 | | | | | 2.441 | 62.0 | 0.984 | 25.0 | | | 1.11 | 0.19 |
| C01000013032 | | | | | | 1.260 | 32 | 0.413 | 10.5 | | | 0.787 | 20.0 | 0.512 | 13.0 | | | 26.13 | 4.58 |
| C01000013040 | | | | | | 1.575 | 40 | | | | | 0.984 | 25.0 | 0.630 | 16.0 | | | 20.91 | 3.66 |
| C01000013050 | | | | | | 1.969 | 50 | | | | | 1.220 | 31.0 | 0.787 | 20.0 | | | 16.51 | 2.89 |
| C01000013063 | | 0.394 | 10 | 0.049 | 1.25 | 2.480 | 63 | | | 0.276 | 7.0 | 1.535 | 39.0 | 0.984 | 25.0 | | | 13.07 | 2.29 |
| C01000013080 | | | | | | 3.150 | 80 | | | | | 1.969 | 50.0 | 1.260 | 32.0 | | | 10.45 | 1.83 |
| C01000013100 | | | | | | 3.937 | 100 | | | | | 2.441 | 62.0 | 1.575 | 40.0 | | | 8.25 | 1.45 |
| C01000013125 | | | | | | 4.921 | 125 | | | | | 3.031 | 77.0 | 1.969 | 50.0 | 12.35 | 54.92 | 6.53 | 1.14 |
| C01000013160 | | | | | | 6.299 | 160 | | | | | 3.937 | 100.0 | 2.520 | 64.0 | | | 5.23 | 0.92 |
| C01340014016 | | | | | | 0.630 | 16 | | | | | 0.354 | 9.0 | 0.189 | 4.8 | | | 44.80 | 7.85 |
| C01340014020 | | | | | | 0.787 | 20 | | | | | 0.433 | 11.0 | 0.236 | 6.0 | | | 34.84 | 6.10 |
| C01340014025 | LH 向左 | 0.528 | 13.4 | 0.055 | 1.4 | 0.984 | 25 | 0.551 | 14.0 | 0.394 | 10.0 | 0.543 | 13.8 | 0.276 | 7.0 | | | 28.00 | 4.90 |
| C01340014032 | | | | | | 1.260 | 32 | | | | | 0.709 | 18.0 | 0.374 | 9.5 | | | 22.40 | 3.92 |
| C01340014040 | | | | | | 1.575 | 40 | | | | | 0.866 | 22.0 | 0.472 | 12.0 | | | 17.42 | 3.05 |
| C01340014050 | | | | | | 1.969 | 50 | | | | | 1.083 | 27.5 | 0.551 | 14.0 | | | 13.94 | 2.44 |

## HIGH PERFORMANCE COMPRESSION SPRINGS
## 高性能压缩弹簧

| Catalog Number 编号 | Coil Dir. 线圈方向 | Outside Diameter (OD) 外径（OD） | | Wire Diameter (d) 线径 (d) | | Free Length (L) Approx. 近似自由长度 (L) | | Fits in Hole Size (H) 孔配合直径 (H) | | Fits over Shaft (R) 轴配合直径(R) | | Load Length ($L_1$) 承载长度($L_1$) | | Solid Height (Sh) Approx. 固定状态下的高度 (Sh) | | Load (P) at $L_1$ +/-10% $L_1$的载荷（P）+/-10% | | Spring Rate (R) Reference Only 弹性系数(R)，仅供参考 | |
|---|---|---|---|---|---|---|---|---|---|---|---|---|---|---|---|---|---|---|---|
| | | in | mm | in | mm | in | mm | in | mm | in | mm | in | mm | in | mm | lb | N | lb/in | N/mm |
| C01340014063 | | | | | | 2.480 | 63 | | | | | 1.378 | 35.0 | 0.709 | 18.0 | | | 11.20 | 1.96 |
| C01340014080 | | | | | | 3.150 | 80 | | | | | 1.732 | 44.0 | 0.945 | 24.0 | | | 8.71 | 1.53 |
| C01340014100 | | | | | | 3.937 | 100 | | | | | 2.165 | 55.0 | 1.181 | 30.0 | | | 6.97 | 1.22 |
| C01340014125 | LH 向左 | 0.528 | 13.4 | 0.055 | 1.4 | 4.921 | 125 | 0.551 | 14.0 | 0.394 | 10.0 | 2.717 | 69.0 | 1.378 | 35.0 | 12.35 | 54.92 | 5.60 | 0.98 |
| C01340014160 | | | | | | 6.299 | 160 | | | | | 3.543 | 90.0 | 1.890 | 48.0 | | | 4.48 | 0.78 |
| C01340014200 | | | | | | 7.874 | 200 | | | | | 4.331 | 110.0 | 2.362 | 60.0 | | | 3.48 | 0.61 |
| C01340014250 | | | | | | 9.843 | 250 | | | | | 5.433 | 138.0 | 2.756 | 70.0 | | | 2.80 | 0.49 |
| C01380011040 | | | | | | 1.575 | 40 | | | | | 0.787 | 20.0 | 0.315 | 8.0 | | | 7.00 | 1.23 |
| C01380011050 | | | | | | 1.969 | 50 | | | | | 0.984 | 25.0 | 0.394 | 10.0 | | | 5.60 | 0.98 |
| C01380011063 | | | | | | 2.480 | 63 | | | | | 1.220 | 31.0 | 0.496 | 12.6 | | | 4.38 | 0.77 |
| C01380011080 | RH 向右 | 0.543 | 13.8 | 0.043 | 1.1 | 3.150 | 80 | 0.575 | 14.6 | 0.441 | 11.2 | 1.575 | 40.0 | 0.630 | 16.0 | 5.51 | 24.52 | 3.50 | 0.61 |
| C01380011100 | | | | | | 3.937 | 100 | | | | | 1.969 | 50.0 | 0.787 | 20.0 | | | 2.80 | 0.49 |
| C01380011125 | | | | | | 4.921 | 125 | | | | | 2.441 | 62.0 | 0.984 | 25.0 | | | 2.22 | 0.39 |
| C01380011160 | | | | | | 6.299 | 160 | | | | | 3.150 | 80.0 | 1.260 | 32.0 | | | 1.75 | 0.31 |
| C01380011200 | | | | | | 7.874 | 200 | | | | | 3.937 | 100.0 | 1.575 | 40.0 | | | 1.40 | 0.25 |